250W, 9 to 40V Input Non-Isolated Step-Down DC-DC Buck Converter

https://product.tdk.com/en/power/i6a
www.emea.lambda.tdk.com/i6a

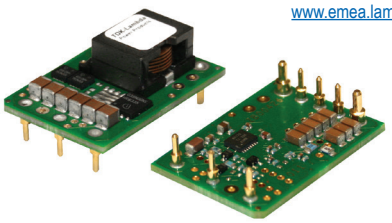

Industrial COTS Test COMM Broadcast Robotics

The i6A series of non-isolated DC-DC step-down converters are ideal for creating additional high current output voltage rails from a single output 12V or 24V AC-DC or DC-DC power supply. The highly efficient i6A series accepts a wide DC input and has a wide output adjustment range in compact 1/16th brick package. Output trim, remote sense, negative or positive logic remote On-Off comes as standard features. Power good, frequency synchronization and output sequencing are optional features.

Features	Benefits
• Up to 250 W in a 1/16th brick package	• High Power Density, Less Board Area Needed
• High Efficiency Up to 98%	• Longer Battery Life / Less Power Consumed
• Wide Output Adjustment 3.3 to 24 V	• One Part Supports Multiple System Voltages
• 9 to 40V Input Range	• Can Operate From Different DC Source Voltages Including Batteries
• Low Component Count With Minimal External Components	• Low Cost
• Minimal Derating Requirements in Low Airflow Environments	• Easy to Cool in End System

Model Selector

Model	Input Voltage (V)	Output Voltage (V)	Max Current (A)	Max Power (W)	Negative Logic On/Off	Positive Logic On/Off	Full Feature
i6A24014A033V-000-R	9 - 40	3.3 - 24	14	250	-	Yes	-
i6A24014A033V-001-R	9 - 40	3.3 - 24	14	250	Yes	-	-
i6A24014A033V-002-R	9 - 40	3.3 - 24	14	250	-	Yes	Yes
i6A24014A033V-003-R	9 - 40	3.3 - 24	14	250	Yes	-	Yes

Preferred model

Related Products

Type	Part Number	Description
DC-DC Buck Converter	i3A	100W, Input 9-53V, Output 5-30V 4.5A or 3.3-16.5V 8A
DC-DC Buck Converter	i6A4W	250W, Input 9-53V, Output 3.3-40V 10A or 3.3-15V 20A
DC-DC Buck Converter	i6AN	75W, Input 9-40V, Negative Output -3.3 to -30V, 8A
Ruggedized DC-DC Buck Converter	RGA	250W, Input 9-40V or 9-53V, Output 3.3-24V or 3.3 up to 40V
DC-DC Buck Converter	i7A	500-750W, Input 18-60V or 18-32V, Output 3.3-24V 33A or 3.3-18V 45A
DC-DC Buck-Boost Converter	i7C	300W, Input 9-53V or 9-36V, Output 9.6-48V 8A, 5-28V 12.5A or 8-24V 20A
Evaluation Kit	i6A14A-C01-EVK-S1	Compact Evaluation kit with i6A24014A033V-001-R module
Evaluation Kit	i6A14A-001-EVK-S1PX	Evaluation kit with i6A24014A033V-001-R module
Evaluation Kit	i6A14A-001-EVK-D2PN	Evaluation kit with i6A24014A033V-001-R module and i6A24008A033V-N01-R modules

Specification

Model		i6A24014A033V
Input		
Input Voltage Range	Vdc	9 - 40
Input Current (max)	A	15
Turn-ON Input Voltage	Vdc	8
Turn-OFF Input Voltage	Vdc	7 - 9
Efficiency	%	92.5 - 98
Safety Certifications and Markings	-	IEC/UL/CSA/EN 62368-1, 60950-1, CE Mark and UKCA Mark
Output		
Output Voltage Tolerance	%	± 4
Line Regulation	%	0.3
Load Regulation	%	1
External Load Capacitance	uF	0 - 2000
Ripple & Noise	mVpp	20
Switching Frequency	kHz	400
Overcurrent Protection Threshold (typ)	A	22
Overtemperature Protection	-	Yes
Output Voltage Adjustment Range		3.3 to 24 See product specifications for output trim equation
Remote Sense	-	(+) Sense, compensating up to 5% of output voltage
Remote On/Off	-	Negative or Positive Logic
Power Good	-	Optional (Full Feature Version)
Frequency Synchronization	-	Optional (Full Feature Version)
Output Sequencing	-	Optional (Full Feature Version)
Environmental		
Operating Temperature (Tref)	°C	-40 to 125
Storage Temperature	°C	-55 to 125
Humidity (non condensing)	%RH	5 - 95 (Operating & Storgae)
Cooling	-	Convection or forced air
Other		
Weight (Typ)	g	15
Size (LxWxH)	mm	33.0 x 22.9 x 12.1
Size (LxWxH)	Inches	1.30 x 0.90 x 0.47
MTBF - Telcordia SR-332	-	> 10 MHrs; 100% Load; Ta = 40 °C
Warranty	yrs	3 years

See website for detailed product specifications.

Pinout

PIN	Function	PIN	Function
1	Vin (+)	7	Sense +
2	On / Off	8	Vout (+)
3	Vin (-) / GND	32	SYNC (Option)
4	Vout (-) / GND	33	MS (Option)
5	Power Good (Option)	34	SEQ (Option)
6	Trim		

Pin base material is brass or copper with gold over nickel plating.

Typical Application Circuit (i6A)

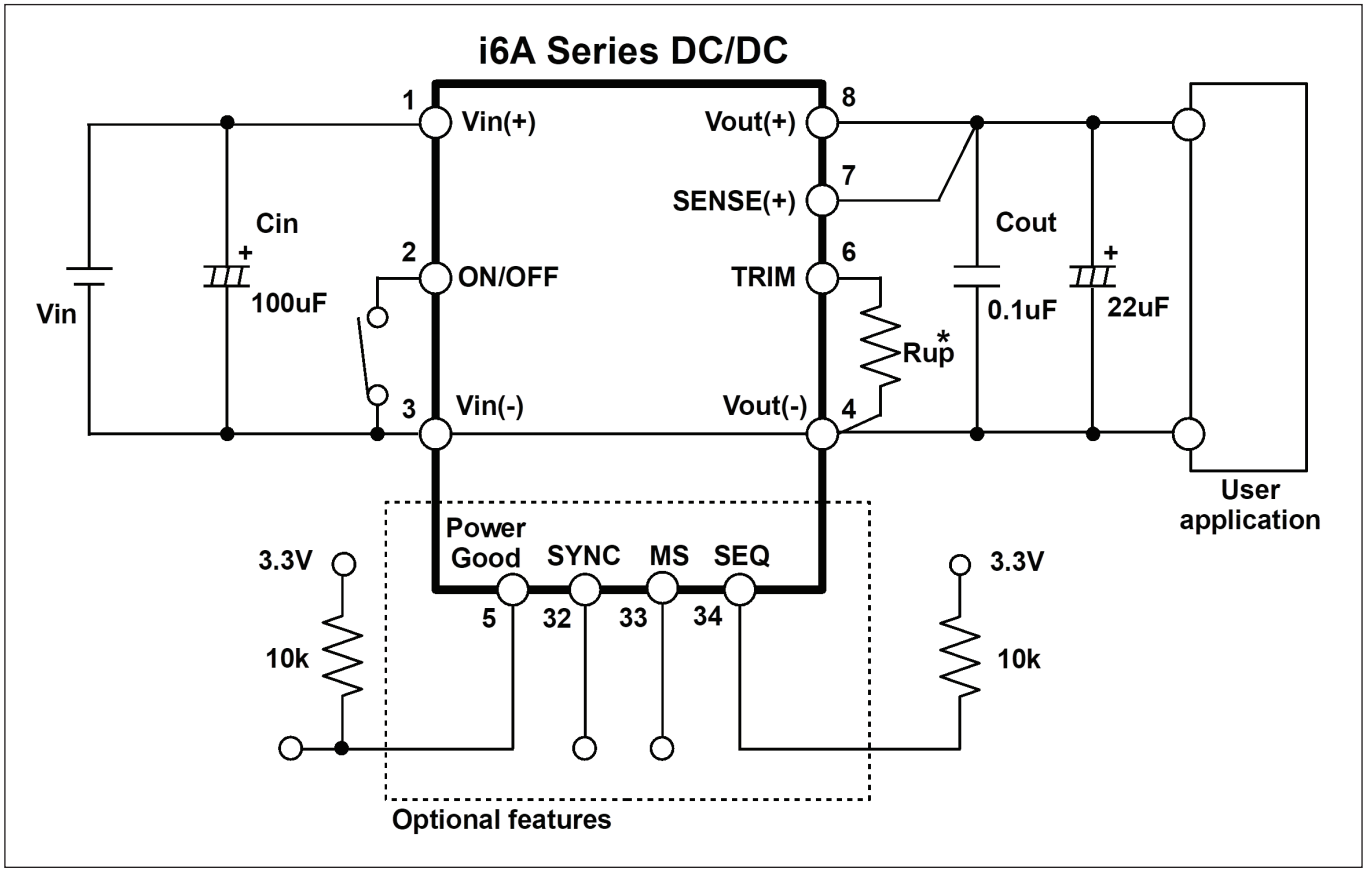

Recommendation:
1. TRIM resistor Rup should be connected to the i6A module as close as possible.

Output vs. Input Voltage Operating Range

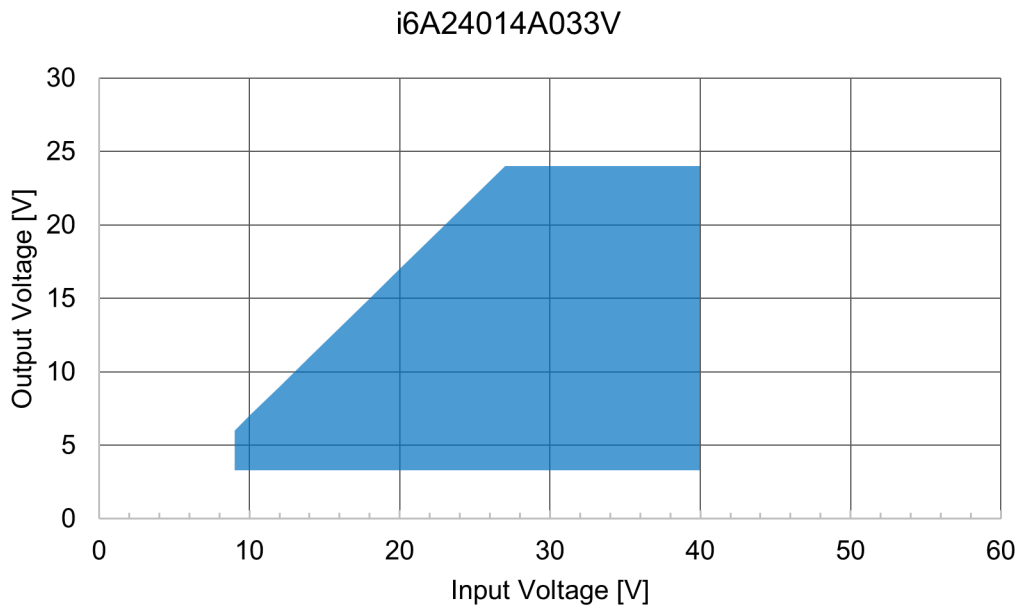

Mechanical Specification

Dimensions are in mm [in]. Unless otherwise specified tolerances are: x.x ± 0.5 [0.02], x.xx ± 0.25 [0.010]

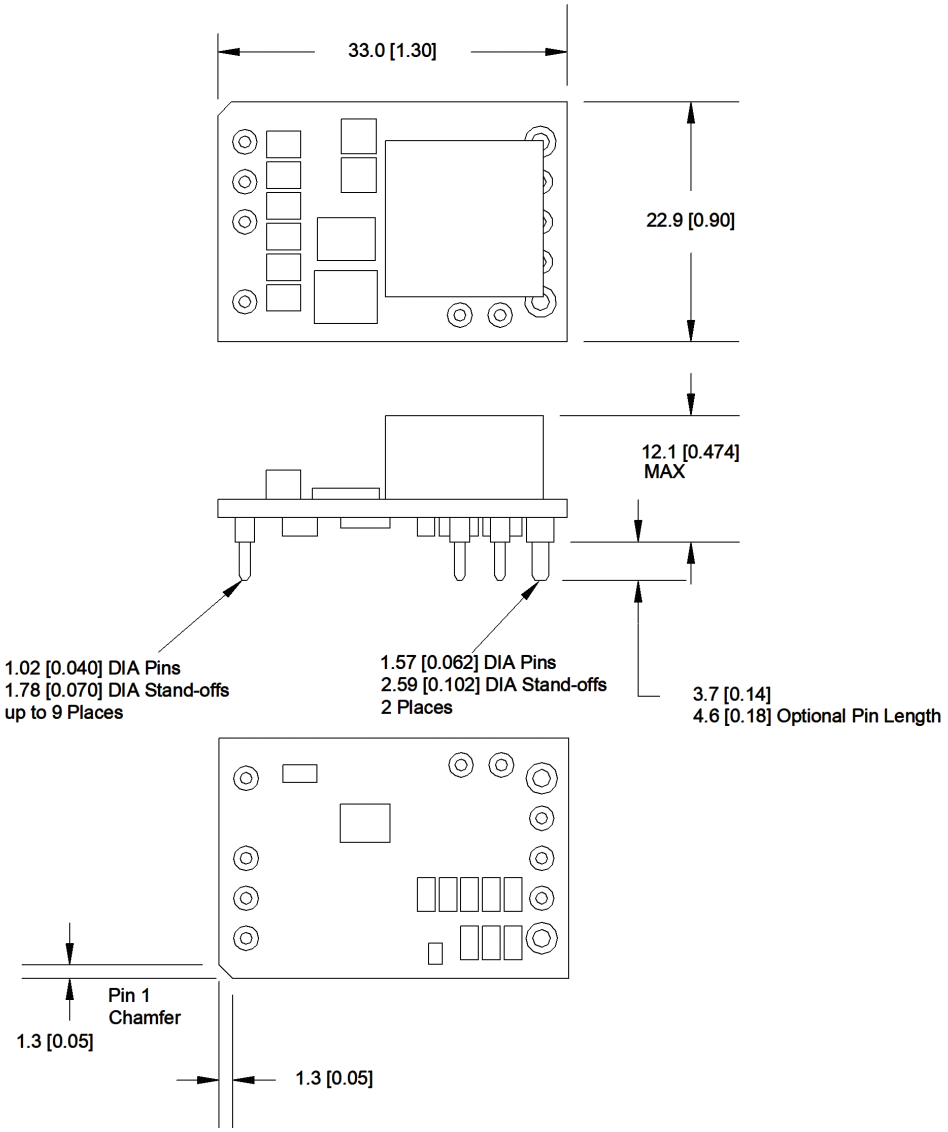

Recommended Hole Pattern (Top View)

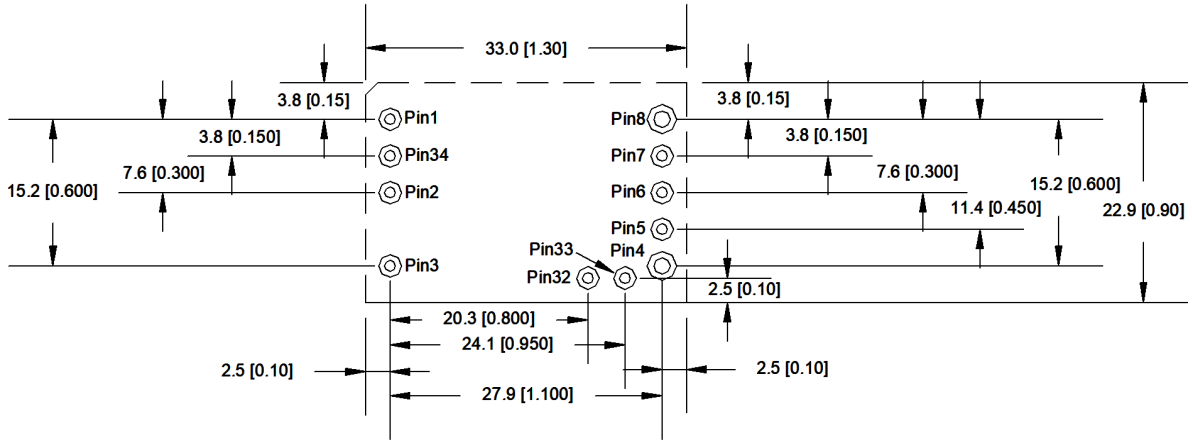

TDK-Lambda France SAS
Tel: +33 1 60 12 71 65
tlf.fr.powersolutions@tdk.com
www.emea.lambda.tdk.com/fr

Italy Sales Office
Tel: +39 02 61 29 38 63
tlf.it.powersolutions@tdk.com
www.emea.lambda.tdk.com/it

Netherlands
tlf.nl.powersolutions@tdk.com
www.emea.lambda.tdk.com/nl

TDK-Lambda Germany GmbH
Tel: +49 7841 666 0
tlg.powersolutions@tdk.com
www.emea.lambda.tdk.com/de

Austria Sales Office
Tel: +43 2256 655 84
tlg.at.powersolutions@tdk.com
www.emea.lambda.tdk.com/at

Switzerland Sales Office
Tel: +41 44 850 53 53
tlg.ch.powersolutions@tdk.com
www.emea.lambda.tdk.com/ch

Nordic Sales Office
Tel: +45 8853 8086
tlg.dk.powersolutions@tdk.com
www.emea.lambda.tdk.com/dk

TDK-Lambda UK Ltd.
Tel: +44 (0) 12 71 85 66 66
tlu.powersolutions@tdk.com
www.emea.lambda.tdk.com/uk

TDK-Lambda Ltd.
Tel: +9 723 902 4333
tli.powersolutions@tdk.com
www.emea.lambda.tdk.com/il-en

TDK-Lambda Americas
Tel: +1 800-LAMBDA-4 or 1-800-526-2324
tla.powersolutions@tdk.com
www.us.lambda.tdk.com

TDK Electronics do Brasil Ltda
Tel: +55 11 3289-9599
sales.br@tdk-electronics.tdk.com
www.tdk-electronics.tdk.com/en

TDK-Lambda Corporation
Tel: +81-3-6778-1113
www.jp.lambda.tdk.com

TDK-Lambda (China) Electronics Co. Ltd.
Tel: +86 21 6485-0777
tlc.powersolutions@tdk.com
www.lambda.tdk.com.cn

TDK-Lambda Singapore Pte Ltd.
Tel: +65 6251 7211
tls.marketing@tdk.com
www.sg.lambda.tdk.com

TDK India Private Limited, Power Supply Division
Tel: +91 80 4039-0660
mathew.philip@tdk.com
www.sg.lambda.tdk.com

For Additional Information, please visit
https://product.tdk.com/en/power/