ENGLISH

General Safety Instructions:

READ SAFETY INSTRUCTIONS

Servicing:
These products are not customer serviceable. TDK-Lambda UK LTD. and their authorised agents only are permitted to carry out repairs.

Critical Components:
These products are not authorised for use as critical components in nuclear control systems, life support systems or equipment for use in hazardous environments without the express written approval of the Managing Director of TDK-Lambda EMEA.

Product Usage:
These products are designed for use within a host equipment which restricts access to authorised competent personnel.

This product is a component power supply and is only to be installed by qualified persons within other equipment and must not be operated as a stand alone product.
This product is for sale to business to business customers and can be obtained via distribution channels.
It is not intended for sale to end users.

This product is a component power supply and does not fall within the scope of the EMC directive. Compliance with the EMC directive must be considered in the final installation. Please contact your local TDK-Lambda office.

Environmental:
These products are IPX0, and therefore chemicals/solvents, cleaning agents and other liquids must not be used.

Environment:
This power supply is a switch mode power supply for use in applications within a Pollution Degree 2, overvoltage category II environment. Material Group IIIb PCB's are used within it.

Output Loading:
The output power taken from the power supply must not exceed the rating stated on the power supply label, except as stated in the product limitations in this instruction manual.

Input Parameters:
This product must be operated within the input parameters stated in the product limitations in this instruction manual.

End of Life Disposal:
The unit contains components that require special disposal. Make sure that the unit is properly disposed of at the end of its service life and in accordance with local regulations.

This product is a component power supply and is only to be installed by qualified persons within other equipment and must not be operated as a stand alone product.
This product is for sale to business to business customers and can be obtained via distribution channels.
It is not intended for sale to end users.

This product is a component power supply and does not fall within the scope of the EMC directive. Compliance with the EMC directive must be considered in the final installation. Please contact your local TDK-Lambda office

RISK OF ELECTRIC SHOCK

High Voltage Warning:
Dangerous voltages are present within the power supply**.** The professional installer must protect service personnel from inadvertent contact with these dangerous voltages in the end equipment.

WARNING: When installed in a Class 1 end equipment, this product must be reliably earthed and professionally installed
The (+) or (-) output(s) can be earthed or left floating.

The mains input connector is not acceptable for use as field wiring terminals.

Do not use mounting screws, which penetrate the unit more than 4.5mm.

Special earthing screws are used on these products which connect the cover to the chassis. They must not be removed. If they are removed by mistake, they must be replaced with new ones and the product tested for earth bonding.

An internal fuse protects the unit and must not be replaced by the user. In case of internal defect, the unit must be returned to TDK-Lambda UK LTD or one of their authorised agents.

The mains switch, where fitted, must not be used as the main disconnect device.

A suitable mechanical, electrical and fire enclosure must be provided by the end use equipment for mechanical, electric shock and fire hazard protection.

Energy Hazards:
Certain modules are capable of providing hazardous energy (240VA) according to output voltage setting. Final equipment manufacturers must provide protection to service personnel against inadvertent contact with these module output terminals. If set such that hazardous energy can occur then the module terminals or connections must not be user accessible.

For units where the fan grill is not fitted, the professional installer must apply the appropriate measures to prevent users from the hazards of electric shock and moving parts, and/or service persons from inadvertent contact with such hazards in accordance with the safety standards applicable to the end product.

HOT SURFACE

External Hot Surfaces:
In accordance with local regulations for Health and Safety at work, manufacturers have an obligation to protect service engineers as well as users. In order to comply with this, a label must be fitted to these products which is clearly visible to service personnel accessing the overall equipment, and which legibly warns that surfaces of these products may be hot and must not be touched when the products are in operation.

The unit may be mounted in any orientation except inverted (mounted on its top) or vertical with the airflow downwards.

The ventilation openings on these products must not be impeded. Ensure that there is at least 50mm spacing between any obstruction and the ventilation openings.

The unit cover/chassis is designed to protect skilled personnel from hazards. They must not be used as part of the external covers of any equipment where they may be accessible to operators, since under full load conditions, part or parts of the unit chassis may reach temperatures in excess of those considered safe for operator access.

On units with end fans and IEC 60320 connector, the fan and connector end of the unit is permitted to be user accessible. (Not for 60601-1 standards compliance).

DEUTSCH

Allgemeine Sicherheitsvorschriften:

LESEN SIE DIE SICHERHEITSVORSCHRIFTEN

Wartung:
Diese Produkte können nicht durch den Kunden gewartet werden. Nur TDK-Lambda UK LTD. und deren zugelassene Vertriebshändler sind zur Durchführung von Reparaturen berechtigt.

Kritische Komponenten:
Diese Produkte sind nicht für die Verwendung als kritische Komponenten in nuklearen Kontrollsystemen, Lebenserhaltungssystemen oder Geräten in gefährlichen Umgebungen geeignet, sofern dies nicht ausdrücklich und in Schriftform durch den Geschäftsführer von TDK-Lambda EMEA genehmigt wurde.

Produktverwendung:
Diese Produkte sind zur Verwendung innerhalb von Host-Anlagen gedacht, die einen auf das Fachpersonal beschränkten Zugang haben.

Dieses Produkt ist eine Stromversorgungs-Komponente und sie darf nur von qualifiziertem Personal in andere Geräte eingebaut werden und sie darf NICHT als eigenständiges ("Stand-Alone") Gerät betrieben werden.
Dieses Produkt ist für den Verkauf an Geschäftskunden entwickelt worden und es kann über Distributionskanäle bezogen werden.
Es ist NICHT für den Verkauf an Endkunden gedacht und konzipiert.

Dieses Produkt ist eine Stromversorgungsbaugruppe und sie fällt NICHT in den Bereich der EMV Direktive.
Die Konformität mit der EMV Richtlinie muss in der finalen Gesamtinstallation betrachtet werden.
Bitte kontaktieren Sie Ihr regionales TDK-Lambda Vertriebsbüro im Falle von Rückfragen.

Umwelt:
Diese Produkte sind IPX0, aus diesem Grund dürfen keine Chemikalien/Lösungsmittel, Reinigungsmittel und andere Flüssigkeiten verwendet werden.

Umgebung:
Dieses Netzteil ist ein Schaltnetzteil zur Verwendung in einer Umgebung mit einem Verschmutzungsgrad 2, Überspannungskategorie II. Materialgruppe IIIb mit darin verwendeten PCBs.

Ausgangsstrom:
Der Ausgangsstrom des Netzteiles darf die Leistung, die auf dem Label des Netzteiles vermerkt ist, nur dann überschreiten, wenn dies in den Produktgrenzen dieses Handbuches ausgezeichnet ist.

Eingangsparameter:
Dieses Produkt muss innerhalb der Eingangsparameter, die in den Produktgrenzen dieses Handbuches angegeben sind, betrieben werden.

Entsorgung am Ende der Betriebszeit:
Das Gerät enthält Komponenten die unter Sondermüll fallen. Das Gerät muss am Ende der Betriebszeit ordnungsgemäß und in Übereinstimmung mit den regionalen Bestimmungen entsorgt werden.

Dieses Produkt ist eine Stromversorgungs-Komponente und sie darf nur von qualifiziertem Personal in andere Geräte eingebaut werden und sie darf NICHT als eigenständiges ("Stand-Alone") Gerät betrieben werden.
Dieses Produkt ist für den Verkauf an Geschäftskunden entwickelt worden und es kann über Distributionskanäle bezogen werden.
Es ist NICHT für den Verkauf an Endkunden gedacht und konzipiert.

Dieses Produkt ist eine Stromversorgungsbaugruppe und sie fällt NICHT in den Bereich der EMV Direktive.
Die Konformität mit der EMV Richtlinie muss in der finalen Gesamtinstallation betrachtet werden.
Bitte kontaktieren Sie Ihr regionales TDK-Lambda Vertriebsbüro im Falle von Rückfragen.

GEFAHR DURCH ELEKTRISCHEN SCHLAG

Hochspannungswarnung:
Innerhalb des Netzteiles gibt es gefährliche Spannungen**.** Der Elektroinstallateur muss das Wartungspersonal vor versehentlichem Kontakt mit den gefährlichen Spannungen im Endgerät schützen.

WARNUNG! Falls Sie unser Netzgerät in eine Anwendung mit Schutzklasse 1 eingebaut haben, stellen Sie sicher, dass es fachgerecht installiert und zuverlässig geerdet ist
Die (+) oder (-) Ausgänge können geerdet werden oder unangeschlossen bleiben.

Der Haupteingangsanschluss ist nicht für die Verwendung als Feldverdrahtungsanschluss geeignet.

Verwenden Sie keine Befestigungsschrauben, die mehr als 4.5mm in das Gerät eindringen.

Zur Befestigung der Abdeckung am Gehäuse werden für diese Produkte spezielle Erdungsschrauben verwendet. Diese dürfen nicht entfernt werden. Sollten sie versehentlich entfernt werden, müssen sie durch neue ersetzt und das Produkt auf Erdschluss geprüft werden.

Eine interne Sicherung schützt das Gerät und darf durch den Benutzer nicht ausgetauscht werden. Im Fall von internen Defekten muss das Gerät an TDK-Lambda UK LTD oder einen der autorisierten Vertriebshändler zurückgeschickt werden.

Der Schalter, sofern vorhanden, ist ein unipolares Gerät, das nicht als Hauptschalter zum Trennen des Gerätes verwendet werden darf.

Ein geeignetes mechanisches, elektrisches und brandgeschütztes Gehäuse muss als Schutz vor der Gefahr von mechanischen Risiken, Stromschlägen und Brandschutz in dem Endgerät vorgesehen werden.

Gefahren durch elektrische Energie:
Von bestimmten Modulen kann je nach Einstellung der Ausgangsspannung gefährliche elektrische Energie ausgehen (240 VA). Die Endgerätehersteller müssen einen Schutz für Servicepersonal vor unbeabsichtigtem Kontakt mit den Ausgangsanschlüssen dieser Module vorsehen. Kann aufgrund der Einstellung gefährliche elektrische Energie auftreten, dürfen die Modulanschlüsse für den Benutzer nicht zugänglich sein.

HEISSE OBERFLÄCHEN

Äußere heiße Oberflächen:
In Übereinstimmung mit den regionalen Bestimmungen für Gesundheit und Sicherheit bei der Arbeit ist der Hersteller für den Schutz von Wartungspersonal und Benutzern verantwortlich. Um diesen Bestimmungen gerecht zu werden, muss auf den Produkten ein Label angebracht werden, das deutlich sichtbar für das Wartungspersonal mit Zugriff auf die gesamte Anlage ist, und das gut lesbar auf die eventuell heiße Oberfläche des Gerätes hinweist und das Berühren des Produktes in Betrieb untersagt.

Das Gerät darf in jeder Position befestigt werden, mit Ausnahme über Kopf (umgekehrt) oder vertikal mit dem Luftstrom abwärts.

Die Belüftungsöffnungen an diesem Produkt dürfen nicht blockiert werden. Achten Sie darauf, dass mindestens 50 mm Abstand zwischen Hindernissen und den Belüftungsöffnungen bleibt.

Die Geräteabdeckung/das Gehäuse ist so entworfen, dass das Fachpersonal vor Gefahren geschützt wird. Sie dürfen nicht als Teil der externen Abdeckung für Geräte verwendet werden, die für den Betreiber zugänglich sein müssen, da Teile oder das gesamte Gerätegehäuse unter voller Auslastung übermäßige Temperaturen erreichen kann, die für den Zugang des Betreibers nicht mehr als sicher betrachtet werden.

An Geräten mit Endlüftern und IEC 60320 Anschluss, kann das Ende des Gerätes, in dem der Lüfter und der Anschluss untergebracht sind, für den Benutzer zugänglich sein.

FRANÇAIS

Consignes générales de sécurité:

LIRE LES CONSIGNES DE SECURITE

Entretien:
Ces produits ne peuvent pas être réparés par l'utilisateur. Seuls, TDK-Lambda UK LTD et ses agents agréés sont autorisés à effectuer des réparations.

Composants critiques:
Ces produits ne doivent pas être utilisés en tant que composants critiques dans des systèmes de commande nucléaire, dans des systèmes de sauvetage ou dans des équipements utilisés dans des environnements dangereux, sans l'autorisation écrite expresse du directeur général de TDK-Lambda EMEA.

Utilisation du produit:
Ces produits sont conçus pour être utilisés dans un équipement hôte dont l'accès n'est autorisé qu'aux personnes compétentes.

Ce produit est une alimentation considérée comme un composant devant être installé par des personnes qualifiées, dans un autre équipement. Il ne doit pas être utilisé en tant que produit fini.
Ce produit est destiné à la vente entre entreprises et peut être obtenu via des canaux de distribution.
Il n'est pas prévu à la vente pour les particuliers.

Ce produit est une alimentation considérée comme un composant, il ne relève pas du champ d'application de la directive CEM. Le respect de la directive CEM doit être pris en compte dans l'installation finale. Veuillez contacter votre bureau TDK-Lambda le plus proche.

Environnement:
Ces produits sont IPX0, et donc on ne doit pas utiliser des produits chimiques/solvants, des produits de nettoyage et d'autres liquides.

Environnement fonctionnel :
Cette alimentation fonctionne en mode commutation pour utilisation dans des applications fonctionnant dans un environnement avec Degré de Pollution 2 et catégorie de surtension II. Elle utilise des cartes des circuits imprimés (PCB) de Groupe IIIb.

Intensité soutirée:
L'intensité soutirée de l'alimentation ne doit pas dépasser l'intensité nominale marquée sur la plaque signalétique, sauf indications contraires dans les limitations du produit décrit dans ce manuel.

Paramètres d'entrée:
Ce produit doit être utilisé à l'intérieur des paramètres d'entrée indiqués dans les limitations du produit dans ce manuel.

Elimination en fin de vie:
L'alimentation contient des composants nécessitant des dispositions spéciales pour leur élimination. Vérifiez que cette alimentation est mise au rebut correctement en fin de vie utile et conformément aux réglementations locales en vigueur.

Ce produit est une alimentation considérée comme un composant devant être installé par des personnes qualifiées, dans un autre équipement. Il ne doit pas être utilisé en tant que produit fini.
Ce produit est destiné à la vente entre entreprises et peut être obtenu via des canaux de distribution.
Il n'est pas prévu à la vente pour les particuliers.

Ce produit est une alimentation considérée comme un composant, il ne relève pas du champ d'application de la directive CEM. Le respect de la directive CEM doit être pris en compte dans l'installation finale. Veuillez contacter votre bureau TDK-Lambda le plus proche.

RISQUE DE CHOC ELECTRIQUE

Attention-Danger haute tension:
Des tensions dangereuses sont présentes dans l'alimentation. L'installateur doit protéger le personnel d'entretien contre un contact involontaire avec ces tensions dangereuses dans l'équipement final.

AVERTISSEMENT: Si ce produit est installé dans un équipement final de classe I, il doit être mis à la terre de manière fiable et installé par un professionnel averti.
Les sorties (+) ou (-) peuvent être raccordées à la terre ou laissées flotttantes.

Le connecteur d'entrée d'alimentation principale ne doit pas être utilisé comme borne de raccordement.

N'utilisez pas de vis pénétrant dans le module sur une profondeur supérieure à 4.5 mm.

Des vis de terre spéciales sont utilisées sur ces produits pour raccorder le couvercle au châssis. Elles ne doivent pas être enlevées. Si elles sont enlevées par erreur, elles doivent être remplacées et le produit doit être testé pour vérifier que le raccordement à la terre est correct.

Un fusible interne protège le module et ne doit pas être remplacé par l'utilisateur. En cas de défaut interne, le module doit être renvoyé à TDK-Lambda UK LTD ou l'un de ses agents agréés.

Le commutateur, s'il est installé, est un commutateur unipolaire et il ne doit pas être utilisé comme coupe-circuit principal.

Une enceinte appropriée doit être prévue par l'utilisateur final pour assurer la protection contre les chocs mécaniques, les chocs électriques et l'incendie.

Energies dangereuses :
Certains modules peuvent générer une énergie dangereuse (240 VA) selon le réglage de tension de sortie. Le fabricant de l'équipement final doit assurer la protection des techniciens d'entretien contre un contact involontaire avec les bornes de sortie de ces modules. Si une telle tension dangereuse risque de se produire, les bornes ou les connexions du module ne doivent pas être accessibles par l'utilisateur.

SURFACE CHAUDE

Surfaces chaudes extérieures:
Conformément aux réglementations locales concernant la santé et la sécurité sur les lieux de travail, les fabricants doivent protéger les techniciens d'entretien et les utilisateurs. Pour cela, une plaque signalétique doit être installée sur ces produits, et cette plaque doit être bien visible pour les techniciens d'entretien intervenant sur l'équipement, et elle doit indiquer de manière bien visible que les surfaces de ces produits peuvent être chaudes et qu'elles ne doivent pas être touchées lorsque les produits fonctionnent.

Le module peut être monté suivant une orientation quelconque, sauf en position inversée (monté sur son sommet) ou en position verticale avec écoulement d'air descendant.

Les orifices de ventilation sur ces produits ne doivent pas être obstrués. Vérifiez qu'il y a un espace libre d'au moins 50 mm entre une obstruction et les orifices de ventilation.

Le couvercle et le châssis du module sont conçus pour protéger des personnels expérimentés. Ils ne doivent pas être utilisés comme couvercles extérieurs d'un équipement, accessible aux opérateurs car en condition de puissance maximum, des parties du châssis peuvent atteindre des températures considérées comme dangereuses pour l'opérateur.

Sur les modules avec ventilateurs d'extrémité et connecteur IEC 60320, le ventilateur et le connecteur sont accessibles pour l'utilisateur.

ITALIANO

Norme generali di sicurezza:

SI PREGA DI LEGGERE LE NORME DI SICUREZZA

Manutenzione:
Il cliente non può eseguire alcuna manutenzione su questi prodotti. L'esecuzione delle eventuali riparazioni è consentita solo a TDK-Lambda UK LTD e ai suoi agenti autorizzati.

Componenti critici:
Non si autorizza l'uso di questi prodotti come componenti critici all'interno di sistemi di controllo nucleari, sistemi necessari alla sopravvivenza o apparecchiature destinate all'impiego in ambienti pericolosi, senza l'esplicita approvazione scritta dell'Amministratore Delegato di TDK-Lambda EMEA.

Uso dei prodotti:
Questi prodotti sono progettati per l'uso all'interno di un'apparecchiatura ospite che limiti l'accesso al solo personale competente e autorizzato.

Questo prodotto è da considerarsi come un alimentatore professionale componente e come tale deve essere installato da personale qualificato all'interno di altre apparecchiature e non può essere utilizzato come prodotto indipendente.
Questo prodotto non è inteso per la vendita al dettaglio o agli utilizzatori finali.

Questo alimentatore è da considerarsi come un componente e come tale non è assogettato dagli scopi della direttiva EMC. Conformità alla direttiva EMC deve essere considerata nell'installazione finale di utilizzo. Gli uffici di TDK-Lambda Sas Succursale Italiana sono a vostra disposizione per ulteriori ragguagli.

Condizioni ambientali:
Questi prodotti sono classificati come IPX0, dunque non devono essere utilizzati sostanze chimiche/solventi, prodotti per la pulizia o liquidi di altra natura.

Ambiente:
Questo prodotto è un alimentatore a commutazione, destinato all'uso in applicazioni rientranti in ambienti con le seguenti caratteristiche: Livello inquinamento 2, Categoria sovratensione II. Questo prodotto contiene schede di circuiti stampati in materiali di Gruppo IIIb.

Carico in uscita:
La potenza in uscita ottenuta dall'alimentatore non deve superare la potenza nominale indicata sulla targhetta dell'alimentatore, fatto salvo dove indicato nei limiti per i prodotto specificati in questo manuale.

Parametri di alimentazione:
Questo prodotto deve essere utilizzato entro i parametri di alimentazione indicati nei limiti per il prodotto, specificati in questo manuale.

Smaltimento:
L'unità contiene componenti che richiedono procedure speciali di smaltimento. Accertarsi che l'unità venga smaltita in modo corretto al termine della vita utile e nel rispetto delle normative locali.

Questo prodotto è da considerarsi come un alimentatore professionale componente e come tale deve essere installato da personale qualificato all'interno di altre apparecchiature e non può essere utilizzato come prodotto indipendente.
Questo prodotto non è inteso per la vendita al dettaglio o agli utilizzatori finali.

Questo alimentatore è da considerarsi come un componente e come tale non è assogettato dagli scopi della direttiva EMC. Conformità alla direttiva EMC deve essere considerata nell'installazione finale di utilizzo. Gli uffici di TDK-Lambda Sas Succursale Italiana sono a vostra disposizione per ulteriori ragguagli.

RISCHIO DI SCOSSA ELETTRICA

Avvertimento di alta tensione:
All'interno dell'alimentatore sono presenti tensioni pericolose. Gli installatori professionali devono proteggere il personale di manutenzione dal rischio di contatto accidentale con queste tensioni pericolose all'interno dell'apparecchiatura finale.

ATTENZIONE: Se installato in un'attrezzatura di classe I, questo prodotto deve essere collegato a terra in modo affidabile ed installato in modo professionale.
Le uscite (+) o (-) possono essere messa a terra o lasciate isolate.

Il connettore dell'alimentazione principale non può essere utilizzato come terminale di collegamento di campo.

Non utilizzare viti che penetrano nell'unità per più di 4.5 mm.

Per questi prodotti vengono usate viti speciali di messa a terra, che collegano il coperchio al telaio. Tali viti non devono essere rimosse. Se le viti vengono tolte per errore, vanno sostituite con nuove viti ed occorre testare il prodotto per verificarne il collegamento a massa.

Un fusibile interno protegge l'unità e non deve essere sostituito dall'utente. Nell'eventualità di un difetto interno, restituire l'unità a TDK-Lambda UK LTD o a uno dei suoi agenti autorizzati.

L'interruttore, se fornito, è un dispositivo unipolare e non deve essere utilizzato come dispositivo principale di scollegamento.

L'apparecchiatura finale deve includere una recinzione meccanica, elettrica e antincendio per proteggere dai pericoli di natura meccanica, dalle scosse elettriche e dai pericoli di incendio.

Pericoli energetici:
Alcuni moduli sono in grado di erogare energia pericolosa (240 VA) a seconda della tensione in uscita impostata. I produttori delle apparecchiature finali sono tenuti a proteggere il personale di manutenzione dal rischio di contatto accidentale con questi terminali dei moduli di uscita. Se impostati su livelli che non escludono l'erogazione di energia pericolosa, questi terminali o collegamenti non devono risultare accessibili da parte dell'utente.

SUPERFICIE CALDA

Superfici esterne calde:
Coerentemente con le norme locali in materia di salute & sicurezza professionali, i produttori sono tenuti a salvaguardare i tecnici di manutenzione, e inoltre gli utenti. Per far fronte a tali obblighi, i prodotti devono presentare una targhetta, chiaramente visibile al personale di manutenzione che accede all'apparecchiatura nel complesso e che risulti inoltre leggibile e avverta gli addetti del rischio che le superfici di questi prodotti possono scottare e non vanno toccate con i prodotti in funzione.

L'unità può essere installata in qualunque orientamento, ma non in posizione capovolta o in posizione verticale con il flusso dell'aria rivolto verso il basso.

Le griglie di ventilazione su questi prodotti non devono essere ostruite. Verificare che vi sia una distanza minima di 50 mm fra le griglie di ventilazione e qualsiasi eventuale ostruzione.

Il coperchio/telaio dell'unità è realizzato per proteggere il personale esperto dai pericoli. Non deve essere usato come parte degli involucri esterni di qualsiasi apparecchiatura, se risulta accessibile da parte degli addetti, poiché è possibile che in condizioni di pieno carico una o più parti del telaio dell'unità giunga/giungano a temperature superiori ai limiti considerati sicuri per l'accesso da parte degli addetti.

Sulle unità provviste di ventole terminali e di connettori a norma IEC 60320, è possibile consentire all'utente accesso al lato della ventola e del connettore dell'unità.

ESPAÑOL

Instrucciones generales de seguridad:

LEA LAS INSTRUCCIONES DE SEGURIDAD

Servicio:
Estos productos no pueden ser reparados por los clientes. TDK-Lambda UK LTD. y sus agentes autorizados son los únicos que pueden llevar a cabo las reparaciones.

Componentes fundamentales:
Estos productos no pueden ser utilizados como componentes fundamentales en sistemas de control nuclear, sistemas de soporte vital o equipos a utilizar en entornos peligrosos sin el consentimiento expreso por escrito del Director General de TDK-Lambda EMEA.

Uso de los productos:
Estos productos han sido diseñados para ser utilizados en un equipo central que restrinja el acceso al personal cualificado autorizado.

Este producto es una fuente de alimentación y sólo puede ser instalado por personal cualificado dentro de otros equipos y no debe ser tratado como un producto independiente. Este producto debe ser vendido entre empresas profesionales y solo puede obtenerse a través de los canales de distribución .No está destinado para la venta a usuarios finales

Este producto es una fuente de alimentación y no se ve afectada por la directiva EMC . El cumplimiento de la directiva EMC se debe considerar en la instalación final . Por favor, póngase en contacto con su oficina local de TDK – Lambda.

Medioambiental:
Estos productos son IPX0 y, por tanto, no pueden utilizarse sustancias químicas/disolventes, agentes de limpieza ni otros líquidos.

Medio ambiente:
Esta fuente de alimentación es una fuente de alimentación de modo conmutado a utilizar en aplicaciones dentro de un entorno con un Grado de contaminación 2 y una Categoría de sobretensión II. En él se utilizan policloruros de bifenilo del Grupo de materiales IIIb.

Carga de salida:
La potencia de salida tomada de la fuente de alimentación no puede sobrepasar el valor nominal indicado en la etiqueta de la fuente de alimentación, excepto en los casos indicados en las limitaciones del producto en este manual.

Parámetros de entrada:
Este producto debe ser utilizado dentro de los parámetros de entrada indicados en las limitaciones del producto en este manual.

Desecho de la unidad:
La unidad contiene componentes que deben ser desechados de una manera especial. Asegúrese de desechar correctamente la unidad al final de su vida útil y conforme a las normas locales vigentes.

Este producto es una fuente de alimentación y sólo puede ser instalado por personal cualificado dentro de otros equipos y no debe ser tratado como un producto independiente. Este producto debe ser vendido entre empresas profesionales y solo puede obtenerse a través de los canales de distribución .No está destinado para la venta a usuarios finales

Este producto es una fuente de alimentación y no se ve afectada por la directiva EMC . El cumplimiento de la directiva EMC se debe considerar en la instalación final . Por favor, póngase en contacto con su oficina local de TDK - Lambda

PELIGRO DE DESCARGAS ELÉCTRICAS

Advertencia de alta tensión:

En esta fuente de alimentación hay tensiones peligrosas. El instalador profesional debe proteger al personal de servicio contra cualquier contacto accidental con estas tensiones peligrosas en el equipo final.

ADVERTENCIA: La instalación de este producto en un equipo de clase I la deben llevar a cabo profesionales y el producto debe estar conectado a tierra.
La salida o salidas (+) o (-) pueden conectarse a tierra o se las puede dejar flotando.

El conector de entrada de la red no es apto para ser utilizado a modo de bornes de cableado de campo.

No utilice tornillos de montaje susceptibles de penetrar en la unidad más de 4.5 mm.

Con estos productos se utilizan unos tornillos de puesta a tierra especiales que conectan la cubierta al chasis. No se deben quitar en ningún caso. En caso de quitarlos por error, hay que reemplazarlos por unos nuevos y comprobar la conexión a tierra del producto.

Un fusible interno protege la unidad y este no debe ser nunca reemplazado por el usuario. En caso de existir algún defecto interno, la unidad debe ser enviada a TDK-Lambda UK LTD o a uno de sus agentes autorizados.

El interruptor, de estar montado, es un dispositivo monopolar y no debe ser utilizado como dispositivo de desconexión principal.

El equipo de uso final debe constituir un recinto de protección mecánica, eléctrica y contra incendios de protección mecánica, contra descargas eléctricas y contra el peligro de incendios.

Peligros de energía:
Algunos módulos pueden generar energía peligrosa (240VA) dependiendo de la configuración de la tensión de salida. Los fabricantes de equipos finales deben proteger al personal de servicio contra un contacto accidental con estos bornes de salida de los módulos. Si se configura de modo que pueda generarse energía peligrosa, hay que evitar que el usuario pueda acceder a los bornes o conexiones del módulo.

SUPERFICIE CALIENTE

Superficies externas calientes:
Según las normas locales relativas a la Salud y Seguridad en el trabajo, los fabricantes están obligados a proteger a los ingenieros de servicio además de a los usuarios. Para que esto se cumpla, debe colocarse una etiqueta en estos productos que pueda ser vista claramente por el personal de servicio que accede al equipo general, y con advertencias legibles de que las superficies de estos productos pueden estar calientes y no deben tocarse cuando los productos se encuentran en funcionamiento.

La unidad se puede montar en cualquier orientación excepto invertida (montada sobre su parte de arriba) o vertical con los orificios para el flujo de aire mirando hacia abajo.

Las aberturas de ventilación de estos productos no deben obstruirse jamás. Asegúrese de que quede una separación de 50 mm por lo menos entre cualquier obstrucción y las aberturas de ventilación.

La cubierta/chasis de la unidad ha sido diseñada para que proteja a las personas cualificadas de los peligros. No deben ser utilizadas como parte de las cubiertas externas de cualquier equipo al que pueden acceder los operarios, ya que bajo unas condiciones de carga completa, la pieza o piezas del chasis de la unidad pueden alcanzar temperaturas superiores a las consideradas seguras para el acceso de los operarios.

En las unidades con ventiladores y un conector IEC 60320 finales, se debe permitir el acceso al usuario al extremo de la unidad donde se encuentra el ventilador y el conector.

PORTUGUÊS

Instruções gerais de segurança:

LEIA AS INSTRUÇÕES DE SEGURANÇA

Manutenção:
Estes produtos não são podem ser submetidos a manutenção por parte do cliente. Apenas a TDK-Lambda UK LTD e os seus agentes autorizados têm permissão para realizar reparações.

Componentes essenciais:
Não é autorizada a utilização destes produtos como componentes essenciais de sistemas de controlo nuclear, sistemas de suporte de vida ou equipamento para utilização em ambientes perigosos sem a expressa autorização por escrito do Director-Geral da TDK-Lambda EMEA.

Utilização do produto:
Estes produtos foram concebidos para utilização dentro de um equipamento de alojamento que apenas permita o acesso a pessoal qualificado autorizado.

Este produto é uma alimentaçao considerado com um componente para ser instalado por pessoas qualificadas, em outros equipamentos. Não deve ser usado como um produto acabado.
Este produto é destinado para venda entre as empresas e pode ser obtido através de canais de distribuição.
Não se destina à venda aos particulares

Este produto é uma alimentaçao considerado com um componente, não é dentro do appliquation âmbito da directiva CEM.
Conformidade com a directiva CEM devem ser considerados na instalação final.
Entre em contacto com seu escritório TDK-Lambda mais próximo.

Ambiental:
Estes produtos são IPX0 e, como tal, não se devem utilizar químicos/solventes, agentes de limpeza e outros líquidos.

Ambiente:
Esta fonte de alimentação é uma fonte de alimentação do modo de comutação para utilização em aplicações com um Nível de Poluição 2 e ambientes da categoria de sobretensão II. São utilizadas placas de circuitos impressos do grupo de materiais IIIb.

Carga de saída:
A potência de saída extraída da fonte de alimentação não deve exceder a classificação assinalada na etiqueta da fonte de alimentação, excepto quando indicado nas limitações do produto neste guia.

Parâmetros de entrada:
Este produto deve ser utilizado dentro dos parâmetros de entrada indicados nas limitações do produto neste guia.

Eliminação no fim de vida:
A unidade contém componentes que necessitam de procedimentos especiais de eliminação. Certifique-se de que a unidade é devidamente eliminada no fim da sua vida útil e que tal é feito em conformidade com os regulamentos locais.

Este produto é uma alimentaçao considerado com um componente para ser instalado por pessoas qualificadas, em outros equipamentos. Não deve ser usado como um produto acabado.
Este produto é destinado para venda entre as empresas e pode ser obtido através de canais de distribuição.
Não se destina à venda aos particulares

Este produto é uma alimentaçao considerado com um componente, não é dentro do appliquation âmbito da directiva CEM.
Conformidade com a directiva CEM devem ser considerados na instalação final.
Entre em contacto com seu escritório TDK-Lambda mais próximo.

RISCO DE CHOQUE ELÉCTRICO

Aviso de alta tensão:
Estão presentes tensões perigosas dentro da fonte de alimentação. O profissional que realizar a instalação deve proteger o pessoal de assistência contra contactos inadvertidos com estas tensões perigosas do equipamento final.

AVISO: Quando instalado num equipamento de Classe I, este produto deve ser ligado à terra de forma fiável e instalado por um profissional.
As saídas (+) e (-) podem ser ligadas à terra ou deixadas soltas.

O conector de entrada de alimentação não deve ser utilizado como terminal de cablagens no local.

Não utilize parafusos de montagem, uma vez que estes penetrarão na unidade em mais do que 4.5 mm.

Nestes produtos utilizam-se parafusos especiais de ligação à terra, que ligam a cobertura ao chassis. Não devem ser removidos. Se forem removidos por engano, deverão ser substituídos por parafusos novos, devendo-se testar a ligação à terra do produto.

Existe um fusível interno que protege a unidade e que não deve ser substituído pelo utilizador. Em caso de defeito interno, a unidade deve ser devolvida à TDK-Lambda UK LTD ou a um dos seus agentes autorizados.

O interruptor, quando instalado, é um dispositivo de pólo simples, não devendo ser utilizado como o dispositivo de desactivação principal.

O equipamento de utilização final deve fornecer um bastidor com protecção mecânica, eléctrica e contra incêndios adequada.

Perigos de energia:
Alguns módulos tem a capacidade de fornecer energia perigosa (240 VA), de acordo com a configuração da tensão de saída. O equipamento final do fabricante deve garantir que o pessoal de assistência está protegido contra contactos inadvertidos com estes terminais de saída do módulo. Se essa energia perigosa for produzida, as ligações e os terminais do módulo não devem ser acessíveis pelos utilizadores.

SUPERFÍCIE QUENTE

Superfícies quentes externas:
Segundo com os regulamentos locais sobre saúde e segurança no local de trabalho, os fabricantes têm a obrigação de proteger os técnicos de manutenção, bem como os utilizadores. De forma a respeitar este regulamento, estes produtos deverão ter uma etiqueta que seja facilmente visível ao pessoal de assistência que aceda ao equipamento em geral, e que alerte, de forma legível, para o facto de as superfícies destes produtos poderem estar quentes, não devendo ser tocadas quando os produtos estão em funcionamento.

A unidade pode ser instalada em qualquer posição, excepto invertida (montada sobre a parte superior), ou na posição vertical, com o fluxo de ar dirigindo-se para baixo.

As aberturas de ventilação destes produtos não devem ser obstruídas. Certifique-se de que existe um espaçamento de pelo menos 50 mm entre qualquer obstrução e as aberturas de ventilação.

O chassis/cobertura da unidade está concebido de forma a proteger o pessoal especializado de perigos. Não devem ser utilizados como parte das coberturas externas de qualquer equipamento em que possam estar acessíveis aos operadores, uma vez que em condições de carga máxima, algumas peças do chassis da unidade podem atingir temperaturas superiores às consideradas seguras para o acesso do operador.

Em unidades com ventiladores finais e conectores IEC 60320, o lado do ventilador e do conector da unidade pode estar acessível ao utilizador.

Special Instructions for medical applications

IEC/EN 60601-1 3rd Edition
ANSI/AAMI ES 60601-1
CSA C22.2 No 60601-1

- These products are designed for continuous operation within an overall enclosure, and must be mounted such that access to the mains terminals is restricted.
- These products are NOT suitable for use in the presence of flammable anaesthetic mixtures with air or with oxygen, or with nitrous oxide.
- The Vega 650 range provides Reinforced insulation between input and outputs, and functional insulation between outputs and earth.
- For SELV and ES ratings see "ES ratings (IEC/EN/UL/CSA 62368-1) and Outputs Connected In Series" and "SELV ratings and Outputs Connected In Series" section below.
- These products are classed as ordinary equipment and are not protected against the ingress of water (IPX0).
- Reference should be made to local regulations concerning the disposal of these products at the end of their useful life.
- For IEC/EN 60601-1 2nd Edition, UL 60601-1 1st Edition, CSA-C22.2 No. 601.1-M90, these products have a reinforced insulation barrier between input and output and Basic insulation barrier between input and Earth.
- For IEC/EN 60601-1 3rd Edition, ANSI/AAMI ES 60601-1, CSA C22.2 No 60601-1, these products provide reinforced insulation between input and outputs of 2 MOPPs. 1 MOPP from input to earth (except the IEC inlet and cooling options D and E which are 1 MOOP) and due consideration must be given to this in the end product.
- Where any part of this product is made accessible to the operator in the end use equipment, the operator must not touch this part and the patient at the same time.
- These products have not been assessed to IEC/EN60601-1-2 (EMC) but EMC test data is available from TDK-Lambda UK Ltd.
- **WARNING: No modification of this product is allowed.**
- Except for permanently installed equipment, the overall equipment into which these products are installed must have double pole fusing on the input mains supply. The products themselves have single pole fusing in the live line only.

Special Instructions for IEC/EN/UL/CSA 61010-1

- Whilst all individual module single outputs are classed as SELV outputs in accordance with IEC/EN/60950 (<60Vdc or 42.4V peak) series combinations of these modules may exceed these values and become hazardous output voltages. For IEC/EN61010-1 the equivalent limits are 70Vdc, 33Vrms or 46.7V peak. Provided these levels are not exceeded, the outputs are not considered hazardous for IEC/EN61010-1.
- If the equipment is used in a manner not specified by the manufacturer, the protection provided by the equipment may be impaired.
- If the earth terminal of the Vega PSU is connected to the main incoming earth conductor of the end equipment, the installer must cover the Vega earth symbol with a label bearing the earth symbol of IEC60417-5019.

Environmental Specifications:

Description	Operation	Storage
Use	Indoor	-
Temperature	0 to 50°C (derating 2.5%°C above 50°C to 65°C - Not covered by approvals).	-40°C to +85°C
Humidity	5 to 95% RH non-condensing	5% to 95% RH non-condensing
Altitude	-200m to 5000m*.	-200m to 5000m.
Pressure	54kPa to 106kPa.	54kPa to 106kPa
Orientation	Horizontal with chassis lowest, on either side or vertical with the airflow upwards.**	All
Material Group	IIIb	
Pollution Degree	2	
Overvoltage Category	II	
Class	I	

Weight	2 kg (Dependent on configuration)
IP Rating	IPX0

*** 3000m for 60601-1 2nd ed, IEC inlet and cooling options D and E.**
** Option "I" can not be vertical with the inlet face accessible.

Level of Insulation:
Dielectric Strength testing is carried out as follows:
Primary mains circuit to earth - 2.25 - 2.35kVDC
Primary mains circuits to transformer core - 4.25 - 4.35kVDC**
Primary mains circuits to secondary -4.25 - 4.35kVDC**
Outputs to each other and to earth are isolated to 200VDC.
**This test is not possible with Y capacitors fitted to the unit as damage to these capacitors may occur. It is also necessary to short circuit the outputs together and to earth

Safety Approvals:
UL60950-1 and CSA22.2 No.60950-1 - UL Recognised. C-UL for Canada.
UL/CSA62368-1 UL Recognised. C-UL for Canada
IEC / EN62368-1 - CE and UKCA mark.
IEC/EN60950-1, IEC/EN62368-1, IEC/EN 61010-1 and IEC/EN60601-1 - CB Report and Certificate.
UL/CSA 61010-1 : UL + C–UL approval
UL/CSA 60601-1/ANSI/AAMI ES 60601-1 - UL + C -UL approval
CE marking when applied to any Vega 650 product indicates compliance with the Low Voltage Directive in that it complies with EN62368-1 and with the RoHS Directive.
UKCA marking when applied to any Vega 650 product indicates compliance with the Electrical Equipment (Safety) Regulations 2016 in that it complies with EN62368-1 and with the Restriction of the Use of Certain Hazardous Substances in Electrical and Electronic Equipment Regulations 2012

Fusing: Internal fuse (FS1) 16A/250V fast acting HBC fuse 6.3x32mm.

Symbols:

AC

EARTH

N – Neutral

L – Live

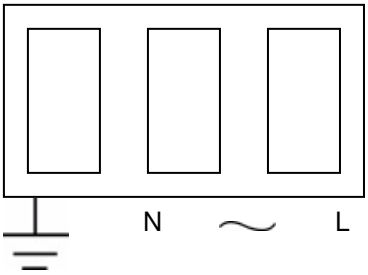

Fast-ons

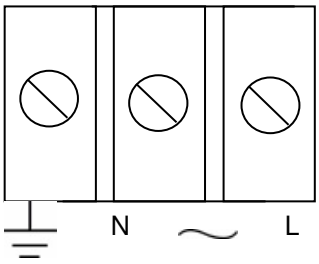

Terminal block

If the earth terminal of the Vega 650 PSU is connected to the main incoming earth conductor of the end equipment, the installer must cover the earth symbol with a label bearing the earth symbol of IEC60417-5019.

Note: All output voltages/variants may not be available as standard units, refer to datasheet for standard product range. These (and other variants) may be available as non-standard or custom units, please contact our sales team for details.

PRODUCTS COVERED

Unit Configuration Code:

a) V6 or Vega 650 range or Vega Smart (650W) or Vega Smart Plus (650W)

where V6 = Vega 650 Range
Vega Smart = Vega 650 PSU with primary digital option fitted
Vega Smart Plus = Vega 650 PSU with primary and secondary digital options fitted.

b) followed by: C, D, E, F, R, Q or P

where F = Standard fan, forward airflow
R = Standard fan, reverse air
Q = Quiet fan, forward airflow
P = Quiet fan, reverse air
C = Customer air
D† = Ruggedised fan, forward airflow
E† = Ruggedised fan, reverse air

† These fans must not be used for user accessible applications.

c) optionally followed by: F, I or S

where F = Fast-on or quick connect input terminals
S = Screw input terminals
I = IEC input

d) followed by: S, M, L, R, or T

where S = Standard Leakage (Class B Filter)
M = Medium Leakage
G = Moderate Leakage
L = Low Leakage
R = Reduced Leakage
T = Tiny Leakage

e) optionally followed by: E, F, EV, FV, EY, FY, xEW, xFW or D

where E = AC fail with PSU & fan enable and 5V aux supply
F = AC fail with PSU & fan inhibit and 5V aux supply
EV = AC fail with PSU & fan enable and 5V/300mA aux supply
FV = AC fail with PSU & fan inhibit and 5V/300mA aux supply
EY = AC fail with PSU & fan enable, 5V/300mA aux supply and fan fail signal
FY = AC fail with PSU & fan inhibit, 5V/300mA aux supply and fan fail signal
xEW = AC fail with PSU & fan enable and 5-15V/1A aux supply, where x = voltage setting
xFW = AC fail with PSU & fan inhibit and 5-15V/1A aux supply, where x = voltage setting
D = Primary digital option. Provides PSU inhibit and enable, fan monitor, standby supply, hours of operation, serial numbers, mains fail, over temperature warning. When secondary digital options fitted also provides status bytes, unit and module IDs, grouping, digital voltage and current limit programming, secondary inhibit and enable, secondary turn on delay, global and secondary module good, module monitoring.

Modules:

B@, C@, C1Y, D@, E@, F1, F2, H@/@ or @_@, L@, W2, W5 & W8.

where the letter represents a module and @ is a number between 1 and 5, which represents the number of turns on the transformer secondary. By reference to the following table, this in turn defines the permitted voltage range of the module.

@ may optionally be followed by the letter L or H, where L and H indicate the low or high output voltage variants of the module.

For W2, W5 & W8 modules only: @ is followed by F, T, E or S

where F = Fixed OVP
T = Tracking OVP
E = Fixed OVP, high current output
S = Tracking OVP, high current output

Followed by F or S, where F indicates fast-on output terminals and S indicates screw output terminals.

Or Z#

where # is a number between 1 and 99. This code represents any two of the above modules that have had their outputs paralleled together. The number # is a module reference number and does not represent the number of turns. May optionally followed by F or S, where F indicates fast-on output terminals and S indicates screw output terminals.

Or BB@, CC@, DD@, EE@, HH@/@ or @_@, JJ@/@ or @_@, LL@, C5B4 or B5B4

where @ is a number between 1 and 5, which represents the number of turns on the transformer secondary. For HH@/@ or @_@ the code represents one H module that has had its two outputs connected in series. For all other variants this code represents two modules, selected from those listed above, that have had their outputs connected in series. May optionally followed by F or S, where F indicates fast-on output terminals and S indicates screw output terminals.
Note: Seriesed outputs may make all outputs hazardous, see Electrical & Thermal Ratings section for details. JJ@/@ or @_@ modules are HH@/@ or @_@ modules with reduced OVP and/or current ratings.

Or B/S where B/S indicates that a blanking plate is fitted in place of a module.

Any of the above modules may have the module letter preceded with # or #/# where # or #/# represents the module output voltage.

Module Options:

N, E, P, R, T, L, K, D, V‡ or R‡

Where:

N = Inhibit, module good and remote sense

E = Enable, module good and remote sense

P = Parallel with current share

R = Remote sense (twin output modules only)

T = Remote sense (one output of twin output modules only)

L = Module good using LED indication

K = Allows for Vega products to be paralleled with Omega products

D = Secondary digital option (may only be fitted to single output modules). Provides analogue voltage and resistive programming, current limit modes, inhibit output, enable output, turn on delay, module good, N+1 paralleling.

V‡ = Voltage programmable output voltage

R‡ = Resistance programmable output voltage

where ‡ represents a number between 1 and 99. Each number indicates an option variant which does not affect safety, of these the following are standard variants:

1 = Inhibit, fixed current limit

2 = Inhibit, programmable current limit

3 = Enable, fixed current limit

4 = Enable, programmable current limit

ELECTRICAL & THERMAL RATINGS:

Standard	60601-1	60950-1 & 61010-1
Nominal input voltage	100-240Vac	100-240Vac
Input voltage range	90-264Vac	90-264Vac
Input frequency range	47 - 63Hz	47 - 63Hz
Maximum Input Current	11A rms	11A rms
Inrush Current	<40A AT 25°C	<40A AT 25°C

Output modules:

Module	Output Voltage	Current	Power	Occupied Slots	Secondary Turns	Ampere Turns	Max Current Limit	Setting for Hazardous Energy
B1L	1.8 – 3.8V	20A	76W	1	1	20	25A	-
B1H	3.9 – 5.5V	20A	110W	1	1	20	25A	-
B2	5 – 9V	25A	225W	1	2	50	31.3A	> 7.6V
B3	9.1 – 16.2V	12A	195W	1	3	36	15A	> 16V
B5	21.6 – 31V	6A	186W	1	5	30	7.5A	-
C1	1.8 – 4.1V	35A	144W	1	1	35	43.8A	-

Module	Output Voltage	Current	Power	Occupied Slots	Secondary Turns	Ampere Turns	Max Current Limit	Setting for Hazardous Energy
C1Y	1.8 – 4.1V	40A	164W	1	1	40	50A	-
C3	9.1 – 16.2V	18A	292W	1	3	54	22.5A	> 10.6V
C4	16.3 – 21.5V	14A	301W	1	4	56	17.5A	> 13.7V
C5	21.6 – 31V	10A	310W	1	5	50	12.5A	> 19.2V
D1L	1.8 – 3.8	50A	190W	1.5	1	50	62.5A	-
D1H	3.9 – 5.5	50A	275W	1.5	1	50	62.5A	> 3.8V
D2	3.8 – 9V	45A	405W	1.5	2	90	56.25A	> 4.2V
D3	8 – 16.5V	24A	396W	1.5	3	72	30A	> 8V
D4	14 – 21.5V	18A	387W	1.5	4	72	22.5A	> 10.6V
D5	21 – 28V	15A	420W	1.5	5	75	18.75A	> 12.8V
E1	1.8 – 3.8V	60A	228W	2	1	60	75A	> 3.2V
E2	3.8 – 8V	60A	480W	2	2	120	75A	> 3.2V
E3L	8 – 13.9V	40A	556W	2	3	120	50A	> 4.8V
E3H	14 – 15V	36A	540W	2	3	108	45A	> 5.3V
E4	14 – 19.9V	30A	597W	2	4	120	37.5A	> 6.4V
E5L	20 – 24V	27A	648W	2	5	135	33.8A	> 7.1V
E5H	24 – 28V	25A	700W	2	5	125	31.3A	> 7.6V
F1	1.8 – 3.8V	80A	304W	2	1	80	100A	-
F2	3.8 – 8V	80A	640W	2	2	160	100A	> 7.6V

Module	Output Voltage	Rated Current	Power	Occupied Slots	Secondary Turns	Ampere Turns	Max Current Limit	Setting for Hazardous Energy
H1L/1L	1.8-3.8/1.8-3.8V	12A/8A	46W/31W	1	1/1	12/8	15A/12A	-
H1L/1H	1.8-3.8/3.9-5.5V	12A/8A	46W/44W	1	1/1	12/8	15A/12A	-
H1H/1L	3.9-5.5 /1.8-3.8V	12A/8A	66W/31W	1	1/1	12/8	15A/12A	-
H1H/1H	3.9-5.5 /3.9-5.5V	12A/8A	66W/44W	1	1/1	12/8	15A/12A	-
H1L/2	1.8-3.8/5-9V	12A/6A	46W/54W	1	1/2	12/12	15A/9A	-
H1H/2	3.9-5.5/5-9V	12A/6A	66W/54W	1	1/2	12/12	15A/9A	-
H1L/3	1.8-3.8/9.1-16.2V	12A/6A	46W/98W	1	1/3	12/18	15A/9A	-
H1H/3	3.9-5.5/9.1-16.2V	12A/6A	66W/98W	1	1/3	12/18	15A/7.5A	-
H1L/4	1.8-3.8/16.3-25V	12A/4.5A	46W/113W	1	1/4	12/18	15A/6A	-
H1H/4	3.9-5.5/16.3-25V	12A/4.5A	66W/113W	1	1/4	12/18	15A/6A	-
H2/1L	5.6-9/1.8-3.8V	10A/8A	90W/31W	1	2/1	20/8	15A/12A	-

H2/1H	5.6-9/3.9-5.5V	10A/8A	90W/44W	1	2/1	20/8	15A/12A	-
H2/2	5.6-9/5.6-9V	10A/6A	90W/54W	1	2/2	20/12	15A/9A	-
H2/3	5.6-9/9.1-16.2V	10A/6A	90W/98W	1	2/3	20/18	15A/7.5A	-
H2/4	5.6-9/16.3-25V	10A/4.5A	90W/113W	1	2/4	20/18	15A/6A	-
H3/1L	9.1-16.2/1.8-3.8V	10A/8A	162W/31W	1	3/1	30/8	15A/12A	>16V/N/A
H3/1H	9.1-16.2/3.9-5.5V	10A/8A	162W/44W	1	3/1	30/8	15A/12A	>16V/N/A
H3/2	9.1-16.2/5.6-9V	10A/6A	162W/54W	1	3/2	30/12	15A/9A	>16V/N/A
H3/3	9.1-16.2/9.1-16.2V	10A/6A	162W/98W	1	3/3	30/18	15A/7.5A	>16V/N/A
H3/4	9.1-16.2/16.3-25V	10A/4.5A	162W/113W	1	3/4	30/18	15A/6A	>16V/N/A
H5/1L	16.2-31/1.8-3.8V	5A/8A	155W/31W	1	5/1	25/8	7.5A/12A	-
H5/1H	16.2-31/3.9-5.5V	5A/8A	155W/44W	1	5/1	25/8	7.5A/12A	-
H5/2	16.2-31/5.6-9V	5A/6A	155W/54W	1	5/2	25/12	7.5A/9A	-
H5/3	16.2-31/9.1-16.2V	5A/6A	155W/98W	1	5/3	25/18	7.5A/7.5A	-
H5/4	16.2-31/16.3-25V	5A/4.5A	155W/113W	1	5/4	25/18	7.5A/6A	-

Module	Output Voltage	Rated Current	Power	Occupied Slots	Secondary Turns	Ampere Turns	Max Current Limit	Setting for Hazardous Energy
L1	4.2 – 5.5V	35A	193W	1	1	35	43.8A	>5.4V
W2	0.25 – 7.5V	30A	225W	1	2	60	37.5A	>6.4V
W5 (STD)	0.25 – 32V	8.5A	272W	1	5	42.5	10.6A	>22.6V
W5 (high current O/P)	0.25 – 15V	10A	150W	1	5	50	13.0A	-
	15.01 – 32V	8.5A	272W	1	5	42.5	10.6A	>22.6V
W8	1 – 48V	5A	240W	1	8	40	7.25A	>33V
BB4	32.6 - 43V	10A	430W	2	8	80	12.5A	>19.2V
CC3	18.2 - 32.4V	18A	583W	2	6	108	22.5A	>10.6V
CC5	48.1 - 62V	10A	620W	2	10	100	12.5A	>19.2V
DD4	28 - 43V	18A	774W	3	8	144	22.5A	>10.6V
DD5	42 - 56V	15A	840W	3	10	150	18.75A	>12.8V
EE2	7.6 - 16V	55A	880W	4	4	220	75A	>3.2V
HH5/3	25.3 – 44.2V	5A	221W	1	8	40	7.5A	>32V
HH5/4	32.5 - 53V	4.5A	238.5W	1	9	40.5	6A	>40V
C5B4	43 - 48V	10A	480W	2	9	90	12.5A	>19.2V
Z2 (D1L+D1L)	1.8 - 3.8V	95A	361W	3	1/1	95/95	125A	>1.9V
Z3 (E1+E1)	1.8 - 3.8V	114A	433W	4	1/1	114/114	150A	>1.6V
Z4 (D1H+D1H)	3.9 - 5.5V	95A	523W	3	1/1	95/95	125A	>1.9V
Z6 (E2+D1H)	3.9 - 5.5V	104.5A	575W	3.5	2/1	209/104.5	137.5A	>1.7V
Z7 (D3+D3)	8 - 16.5V	45.6A	752W	3	3/3	136.8/136.8	60A	>4V
Z18 (L1+L1)	4.5 - 5.5V	66.5A	366W	2	1/1	66.5/66.5	87.5A	>2.7V

Additional module limitations:

E2 module fitted in slots 4/5 is limited to 55A.
C1Y module can only be fitted in slot 1.
F2 module may only be fitted in slots 1/2 and is limited to 75A for ambient temperatures of greater than 45°C.
F1 module may only be fitted in slots 1/2.

For PSUs with three D modules fitted or two D modules and an E module fitted in slots 4 and 5:
D1L & D1H in slots 2/3 is limited to 42A and in slots 4/5 is limited to 47A
D2 in slots 2/3 is limited to 40A
The D2 module is limited to 8V when a digital secondary option is fitted.

PSUs fitted with a W2 module are limited to a maximum ambient of 45°C.

W2 & W5 is followed by V or R indicating voltage or resistance programming, followed by 1, 2, 3 or 4,
where: 1 = Inhibit + Fixed or prog current limit + Fixed 0/V
2 = Inhibit + Fixed or prog current limit + Track 0/V
3 = Enable + Fixed or prog current limit + Fixed 0/V
4 = Enable + Fixed or prog current limit + Track 0/V

W8 is followed by V8, where: V8 = Enable + Voltage Programming + Fixed Current Limit

Adjusting output voltage beyond the stated range may cause overvoltage protection (OVP) to operate, whereby all outputs will turn off. To reset OVP turn back output voltage adjustment and remove the mains supply for 30 seconds, and then swich back on.

All the above ratings and limitations apply to the individual modules from which a series or paralleled pair is made.

ES ratings (IEC/EN/UL/CSA 62368-1) <u>and Outputs Connected In Series:</u>

- Non-earthed outputs that have secondary's with 4 or more turns are ES2 as a single fault in the secondary may make them exceed the ES1 limits between output and earth.
- Non-earthed outputs that are in series are ES1 if all the series outputs use 1 turn secondary's and there are no more than 3 outputs connected in series.
- For series outputs, all outputs are ES1 except under the following circumstance: Outputs connected in series are ES2 if the highest rated module output at nominal voltage + 30% + the total voltage of the remaining series modules at the max rated voltage of each module > 60Vdc < 120Vdc and ES3 for any greater output voltage.
- The total voltage of series outputs must not exceed 160V.
- The highest ES rating of any series outputs then applies to all the outputs.

<u>SELV and Outputs Connected In Series:</u>

Outputs are SELV except as described below:
- Non-earthed outputs that have secondaries with 2 or more turns are non-SELV as a single fault in the secondary may make them exceed the SELV limit between output and earth.
- Non-earthed outputs that are connected in series are non-SELV unless all the seriesed outputs use 1 turn secondaries and there are no more than 3 outputs connected in series.
- Outputs connected in series are non-SELV if the total output voltage + 20% of the max. rated output voltage of the output with the highest rated voltage exceeds 60Vdc (the 20% addition allows for a single fault in any one individual channel).
- The total voltage of a seriesed output must not exceed 160Vdc.
- If any output or seriesed output is non-SELV then all the outputs in the PSU must be considered non-SELV.
- Non-SELV outputs must be guarded or a deflector fitted during installation to avoid a service engineer making inadvertent contact with the output terminals, or dropping a tool onto them.
- All outputs have operational spacings to earth, and due consideration must be given to this in the end product design.

When the IEC inlet option is fitted (option I) together with a plastic fan grill then the end face of the PSU with the fan grill may be operator accessible.

Cooling Options:

Cooling Option	Max Ambient (°C)	Dual Width Modules Fitted	Max Power (W)	Max AT (total)	Module Current Rating (All Modules)
F & D (Standard or Ruggedised Fan – Forward Airflow)	50	No	650	220	100%
		Yes	650	220	100%
R, E (Standard or Ruggedised Fan – Reverse Airflow)	40	No	530	212	100%
		Yes	550	212	90%
	45	No	500	200	100%
		Yes	500	212	90%
	50	No	440	176	100%
		Yes	420	212	90%
Q (Quiet Fan – Forward Airflow)	50	No	550	180	100%
		Yes	550	180	100%
		No	650	145	100%
		Yes	650	145	95%
P (Quiet Fan – Reverse Airflow)	40	No	440	176	100%
		Yes	500	203	85%
	45	No	400	160	100%
		Yes	420	203	85%
	50	No	350	140	100%
		Yes	370	184	85%
C (Customer Airflow)	50	Rating determined by customer subject to a max power of 650W and 220AT			

Ruggedised fan (Papst 622HH) not for use with PSU's fitted with IEC Inlet.

Customer Air Cooling (option C):

The following method must be used for determining the safe operation of PSUs when C option (Customer Air) is fitted, ie fan not fitted to PSU.

For PSUs cooled by customer supplied airflow the components listed in the following table must not exceed the temperatures given. Additionally ratings specified for units with an internal fan must still be complied with, eg mains input voltage range, maximum output power, ampere turns, module voltage / current ratings and maximum ambient temperature. To determine the component temperatures the heating tests must be conducted in accordance with the requirements of the safety standard being considered for the end equipment.

Test requirements include: PSU to be fitted in its end-use equipment and operated under the most adverse conditions permitted in the end-use equipment instruction manual/specification and which will result in the highest temperatures in the PSU. To determine the most adverse conditions consideration should be given to the end use equipment maximum operating ambient, the PSU loading and input voltage, ventilation, end use equipment orientation, the position of doors & covers, etc. Temperatures should be monitored using type K fine wire thermocouples (secured with cyanoacrylate adhesive, or similar) placed on the hottest part of the component (out of any direct airflow) and the equipment should be run until all temperatures have stabilised.

Circuit Ref.	Description	Max. Temperature (°C)
-	Power transformer primary, secondary and core	130
T1, TX101, TX201	Module current transformer windings	127
XQ1, XT1	D, E, EV, F & FV Primary option transformers	90
XTR1	EY, FY, EV & FV Primary option transformers	90
TX1	xEW & xFW Primary option transformers	130
L1, L2, XT601	Choke winding	110
L4, T2	Choke winding	117
Various	All other choke & transformer windings	110
RLY1	Relay	100
C15	X capacitor	100
Various	All other X and electrolytic capacitors	105

C2, C3, C14	Electrolytic Capacitor	67
Various	All other 10mm dia Electrolytic Capacitors	80
Various	All other 12.5mm dia Electrolytic Capacitors	85

See diagrams for locations of components in the PSU.

Custom Models:

All ratings as per standard models unless otherwise stated.

Model: V6 RSF 3/1HS C3S B/S E2S
Max. outputs: 12V, 2A; 5V, 1.5A; 12V, 10A; 5V 52A
Max. output power: 411.5W, max. ambient: 40°C, orientation: horizontal only.

Model: V6 FISFV 5.1F2SP 12B3F 3.4E1SP
Max. outputs: 5.1V, 80A; 12V, 3A; 3.4V, 60A
Max. output power: 648W, orientation: horizontal only

Model: V6FSS 24C5S 24D5S
Max. outputs: 24V, 10A; 24V, 15A
Max. output power: 600W, max. ambient: 65°C

Model: Vega 650 BFTF B/S 24.5E5HFN
Max. output: 24.5V, 18.37A
Max. output power: 450W

Model: Vega 650 ASS5FW 3.35C1Y5S 12.6/5.1H3/1HSR 6.1/12.6H2/3SR 5.1/5.3H1H/1HSR (K60162)
Input: 90-264Vac, 47-63Hz,
Max. outputs: 3.35V, 22A; 5.1V, 3.5A; 12.6V, 7A; 12.6V, 1A; 6.1V, 3A; 5.3V, 3A; 5.1V, 6.5A ,
Max. output power 259.7W

Model: NS-TLG/V6RFS 3.3F1SV5 24C5S W5FSV3 W8FSV8 (K60221*) where * may be any number of letters and/or numbers indicating non-safety related differences.
Input: 100-240Vac nom, 120-350Vdc max
Maximum output power: As standard model
Orientation: As standard model
Cooling: Reverse air.

Model: NS-TLG/V6RFS12FW 3.3F1SV5 24C5S W5FSV3 W8FSV8 (K60220*) where * may be any number of letters and/or numbers indicating non-safety related differences.
Input: 100-240Vac nom. May also have 120-350Vdc.
Maximum output power: As standard model
Orientation: As standard model
Cooling: Reverse air.

Model: NS-LAM/V6RFS 3.3F1SV5 12/12H3/3S W5FSV3 W8FSV8 (K60184*) where * may be any number of letters and/or numbers indicating non-safety related differences.
Input: 100-240Vac nom. May also have 120-350Vdc.
Maximum output power: As standard model
Orientation: As standard model
Cooling: Reverse air.

Input Connections:

Input tabs - 6.3mm x 0.8mm, tin plated brass, rated 15A
Input Screw Terminals: M3 screws with 8.25mm spacing between screw head centres. Input IEC 60320: Rated 10A/250Vac (15A/132Vac)

Torque Settings for Input M3 Screw Terminals: 0.5 – 0.6Nm

Mating input faston connectors				
Brand	Colour	Wire size (awg)	Part number	Current rating
Amp	Red	22 - 18	2-520407-2	15A
Amp	Blue	16 - 14	3-520408-2	15A

Output Connections:

Ratings:

Single slot, output modules (B, C, L): Two 6.35mm fast-ons per output each rated at 18A or M4 screw terminals rated at 35A.
Single slot, twin output module (H): One 6.35mm fast-on per output rated at 18A or M3 screw terminals rated at 15A.
Dual slot, single output modules (D, E): Two 9.5mm fast-ons per output each rated at 32A or M5 screw terminals rated at 90A.

Maximum Torque Settings for Output Screw Terminals: M3 – 0.5 – 0.6Nm
M4 – 1.1 – 1.3Nm
M5 – 2.4 – 2.6Nm

Adjustment and Derating:

The Vega 650 series is designed to provide a max output power of 650W at nominal output voltages. The following procedure must be used to ensure the PSU is operated within its ratings:

- Calculate user power for each module (volts x amps).
- Add all the individual module powers together. The total power must not exceed the value given.
- Calculate secondary transformer turns x amps for each module. See the outputs table for transformer secondary turns.
- Add all the module turns x amps together and this must not exceed the ampere turns
- If necessary reduce the loading until the conditions are met, ie. power and ampere-turns maxima.

Mechanical Outline Drawings:

Primary Options

Specified Option	Pin 5 Logic 0	Pin 6 Logic 1
Inhibit	Outputs OFF	Outputs OFF
Enable	Outputs ON	Outputs ON

Logic 0 = 0-0.8V Logic 1 = 2-5V with respect to 0V (Pin 3)

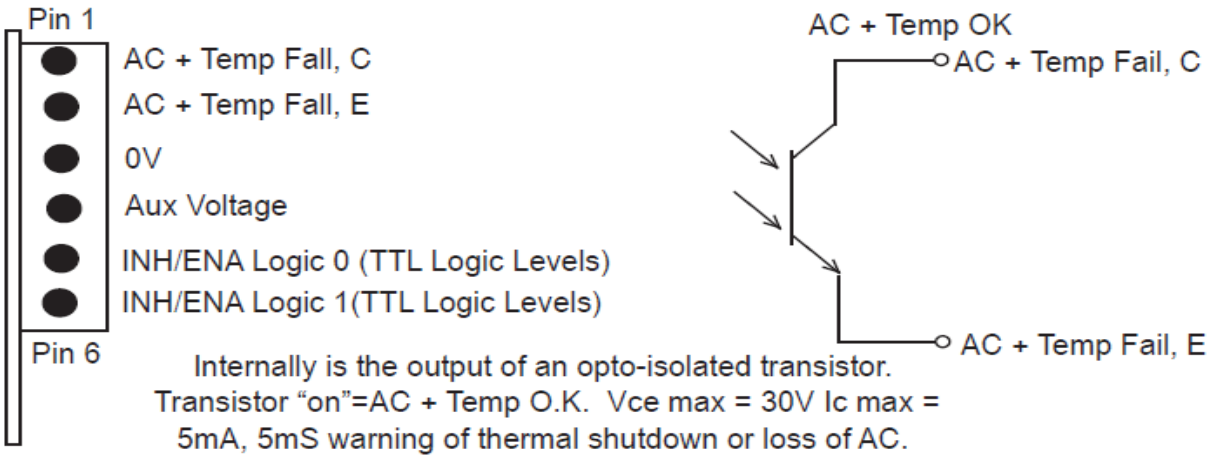

Secondary Options

Remote Sense Option

Single Output Module "N" Option:

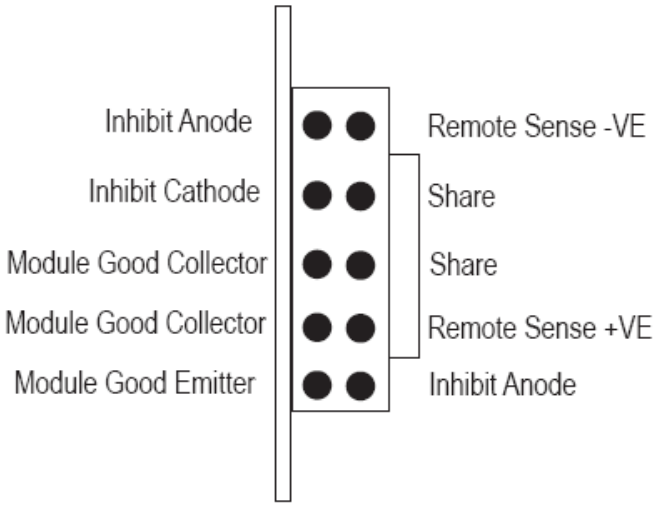

Inhibit

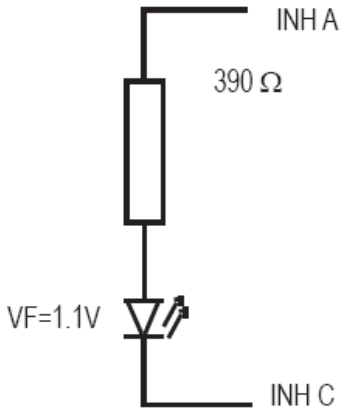

Internally is a 390Ω resistor in series with a diode of an optocoupler. Drive ≥2mA to inhibit module(max 13mA).

Module Good

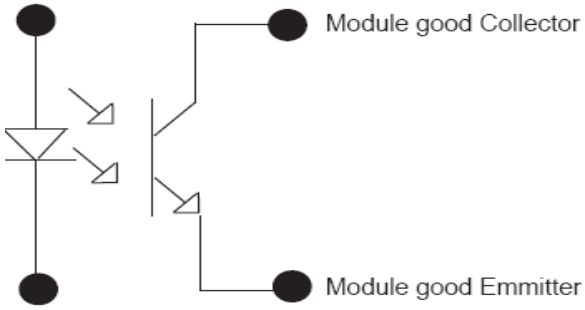

Transistor ON (saturated) when module is GOOD.

Module is GOOD when output voltage is between (88-96%) and (104-112%) of its set voltage.

Max Vce 70V
Vsat <0.4V at 1mA current

TWIN Output Module "N" Option

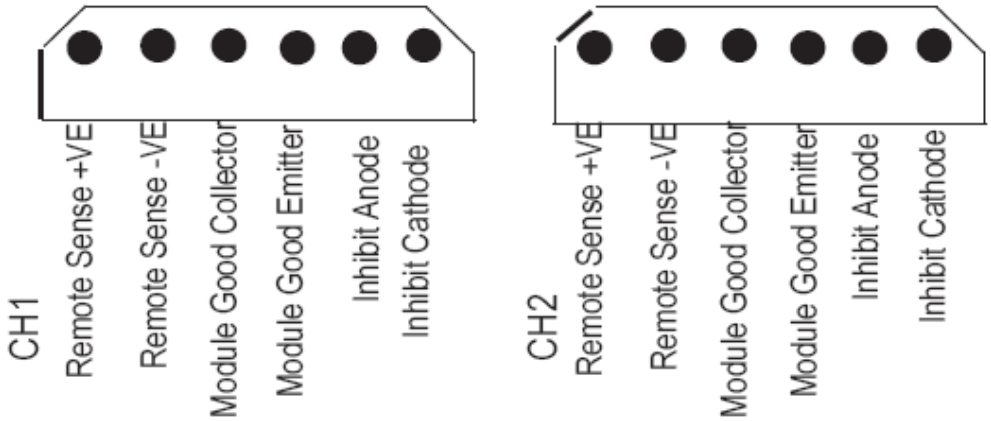

TWIN Output Module “R” Option

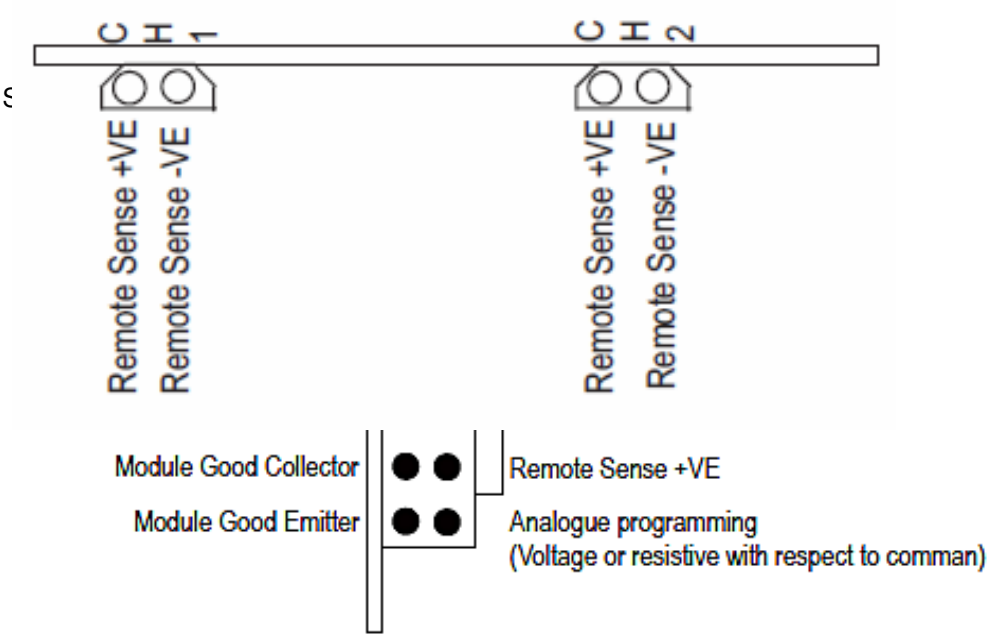

Single Output Wide Range Programmable Option

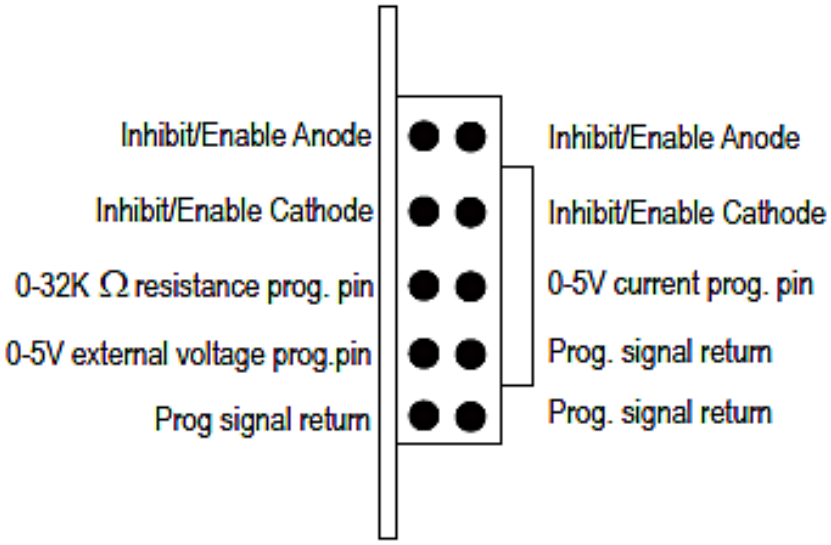

LAYOUT FOR VEGA 650 CONVERTER

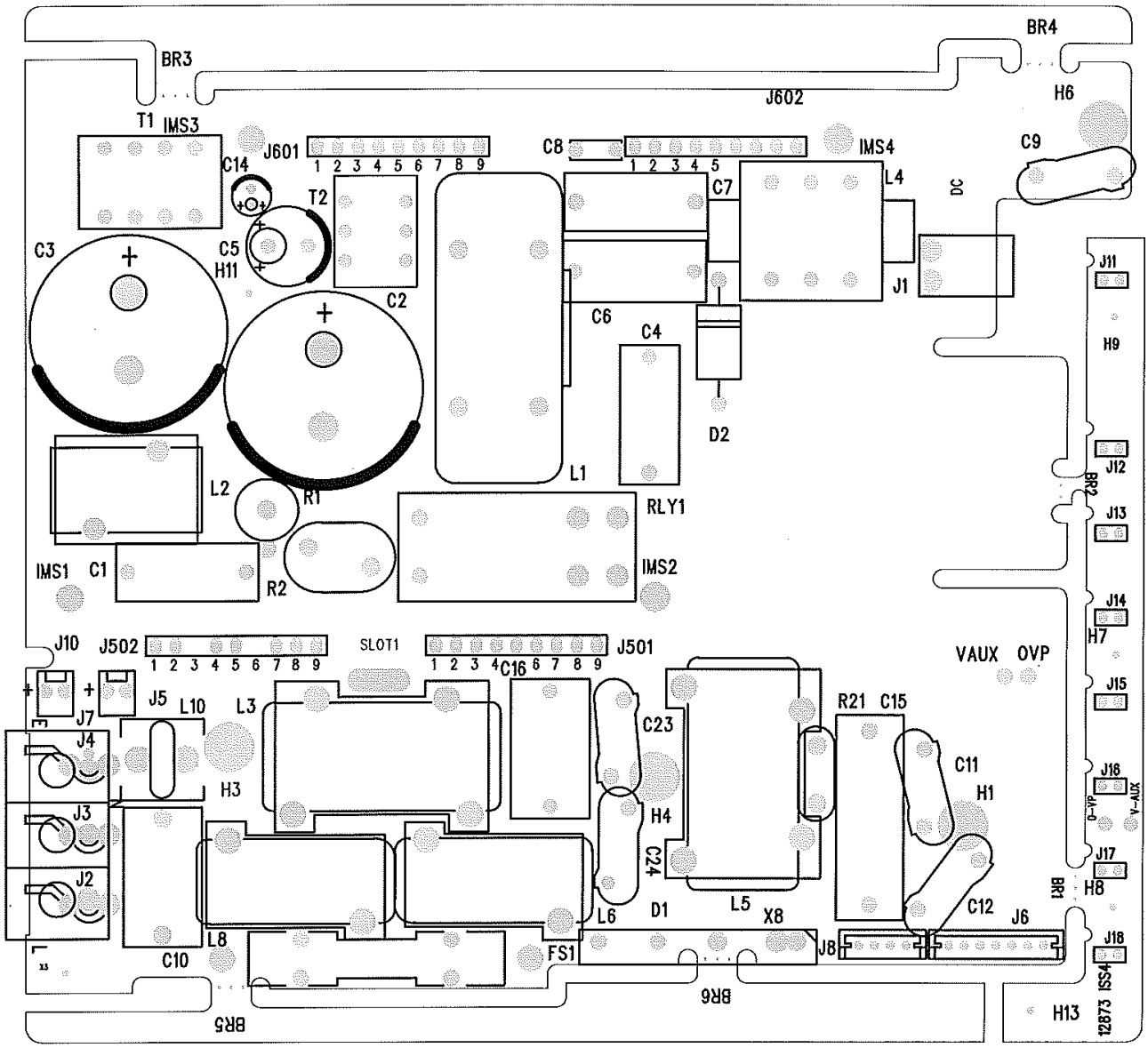

LAYOUT OF VEGA TWIN MODULE

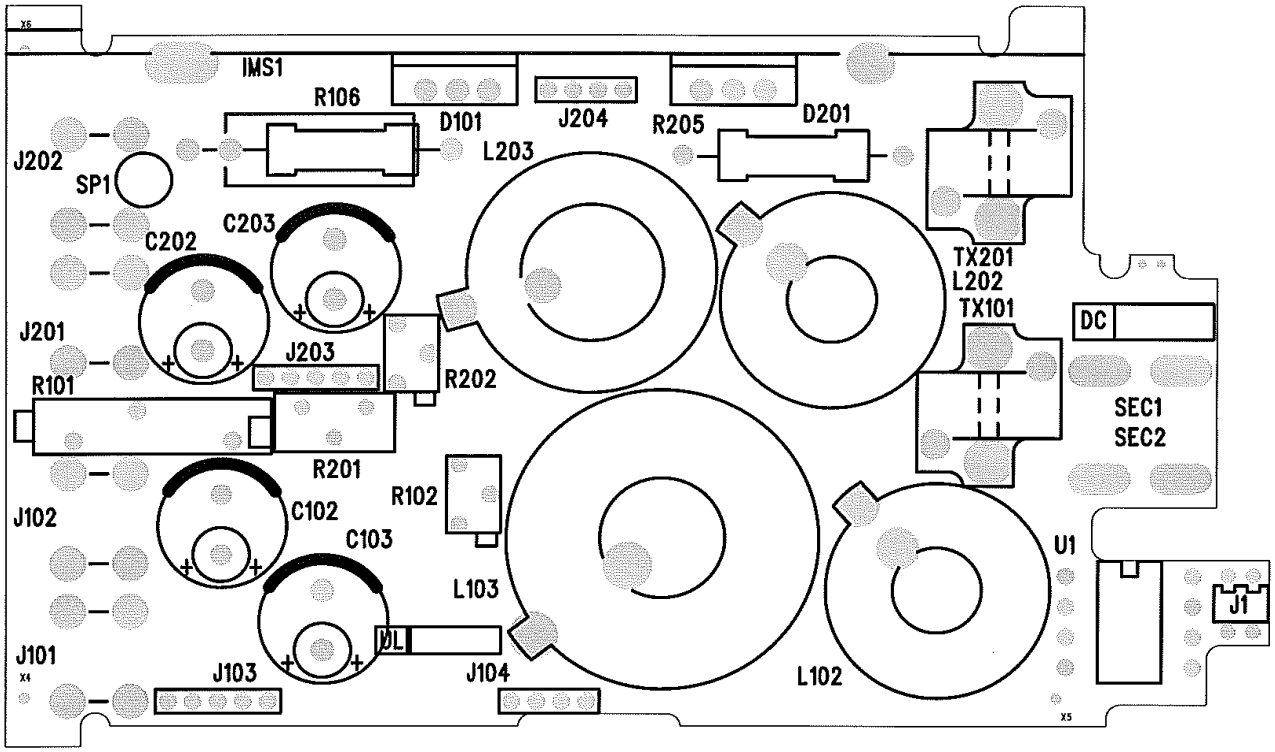

LAYOUT OF VEGA H5/4 MODULE

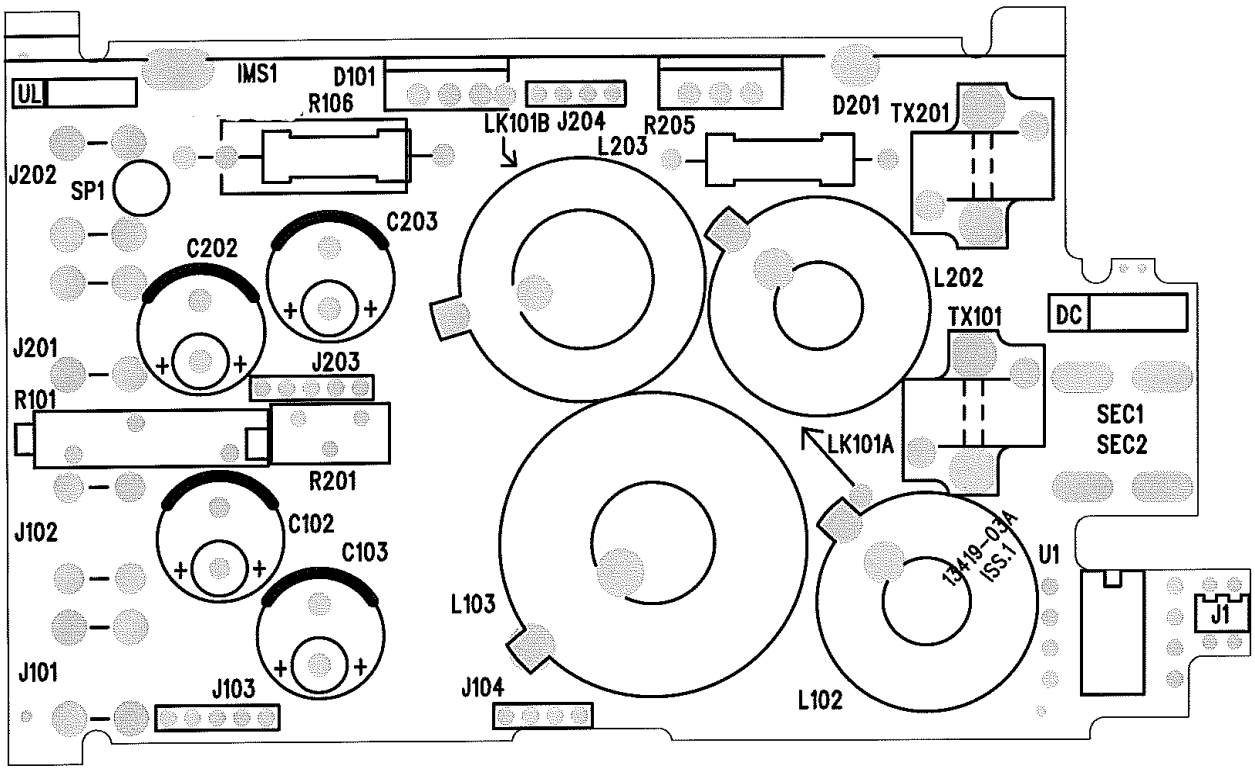

LAYOUT OF VEGA SINGLE MODULE

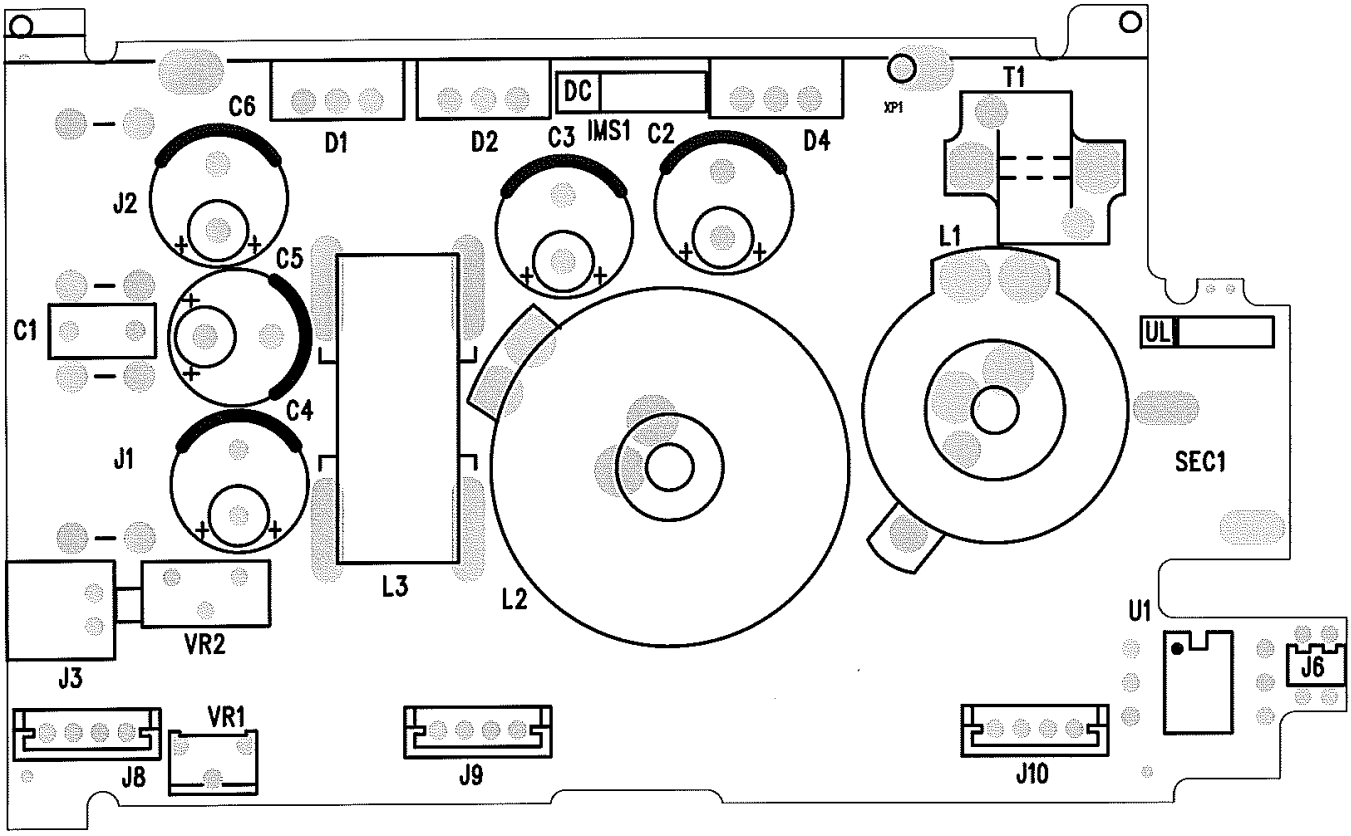

LAYOUT OF VEGA DUAL WIDTH MODULE

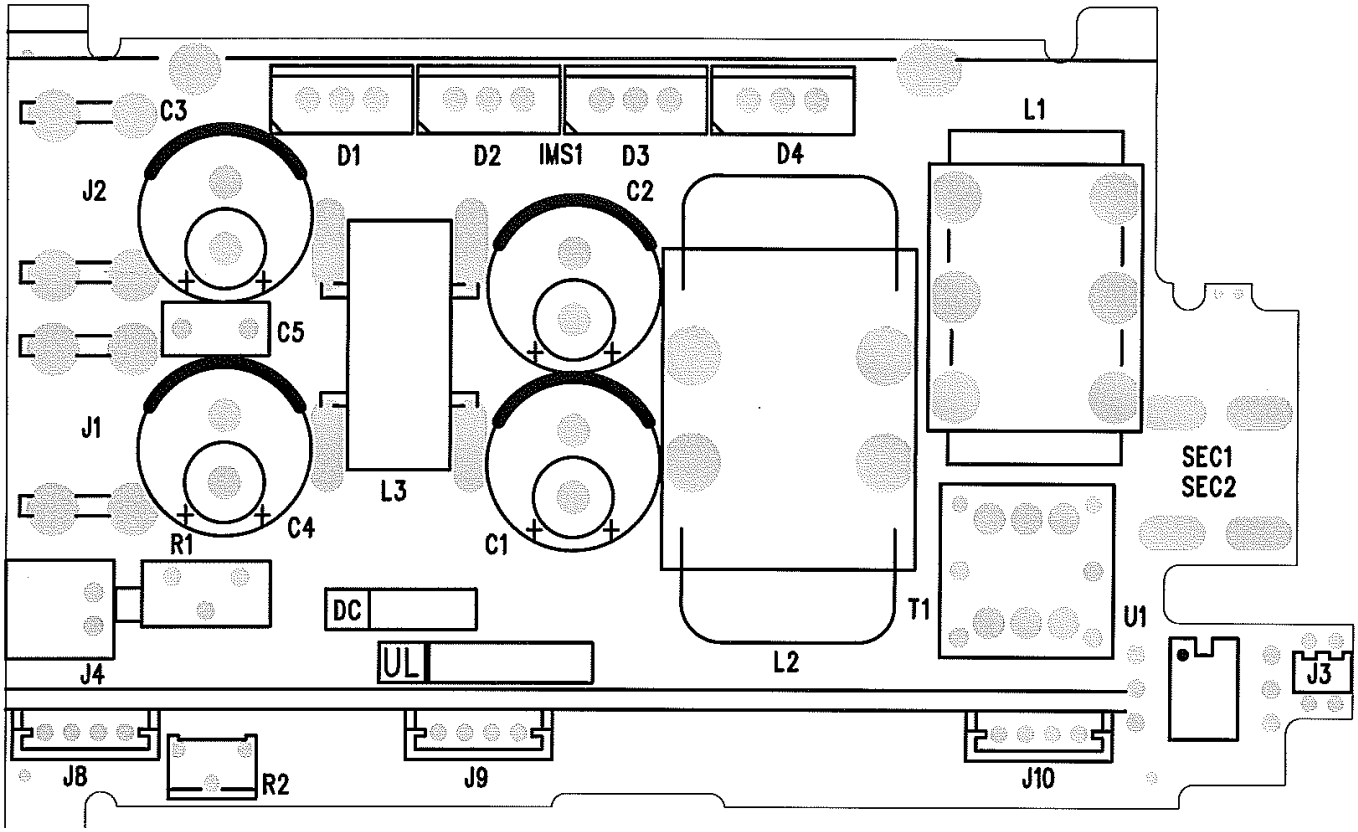

LAYOUT OF VEGA SINGLE MODULE HIGH CURRENT

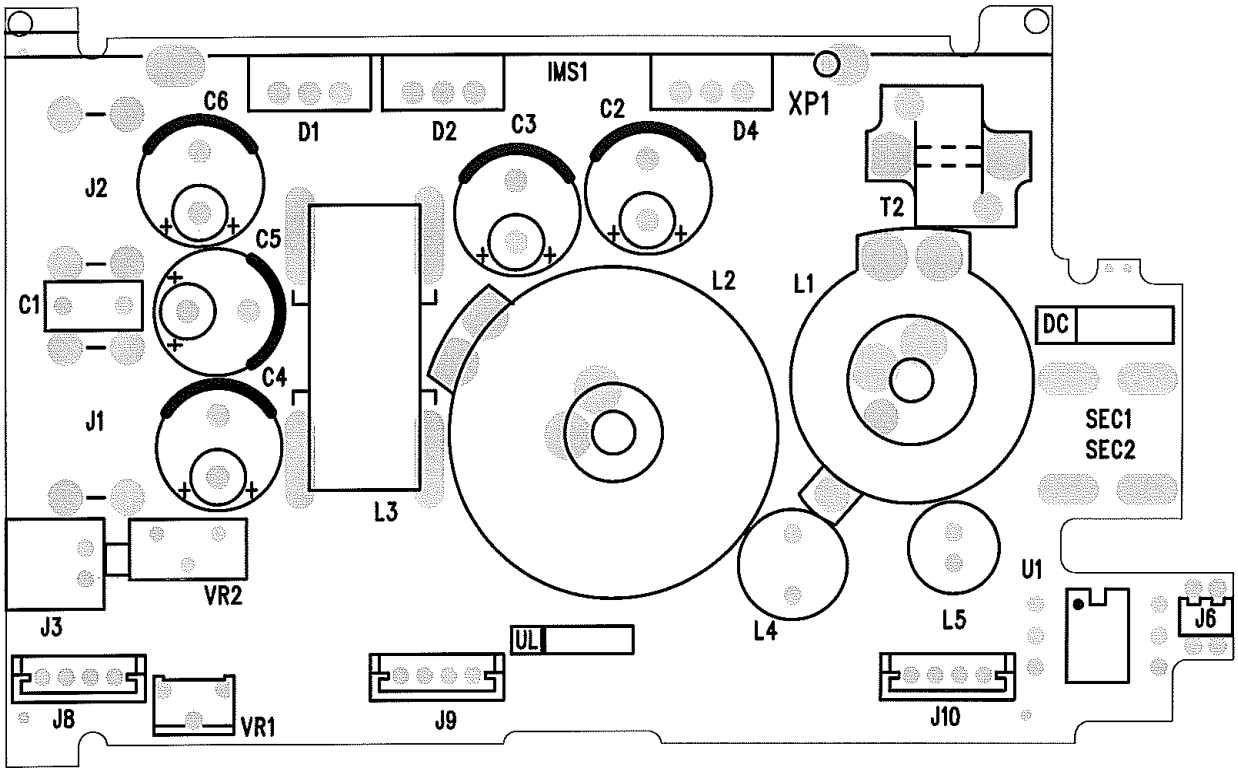

LAYOUT OF VEGA W5 MODULE

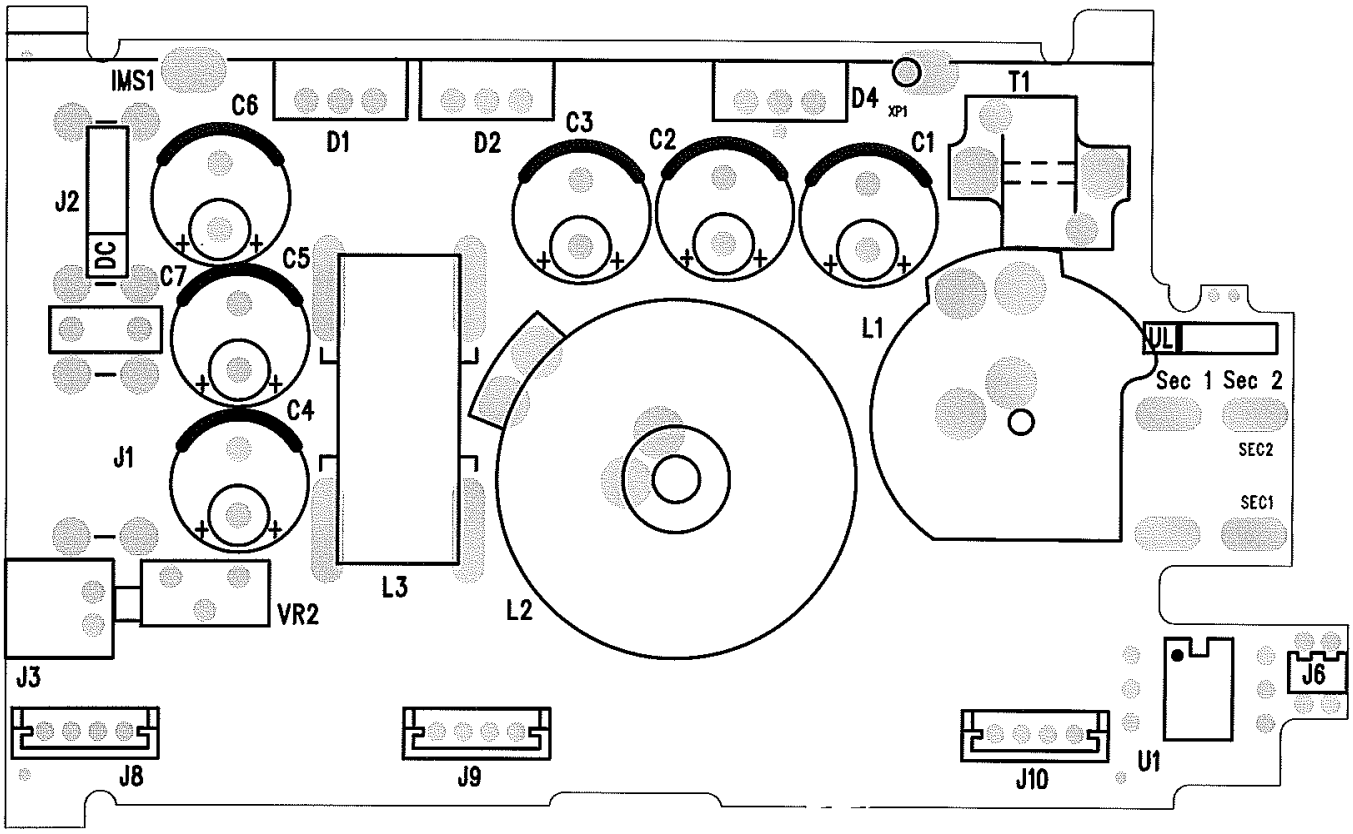

LAYOUT OF VEGA W8 MODULE

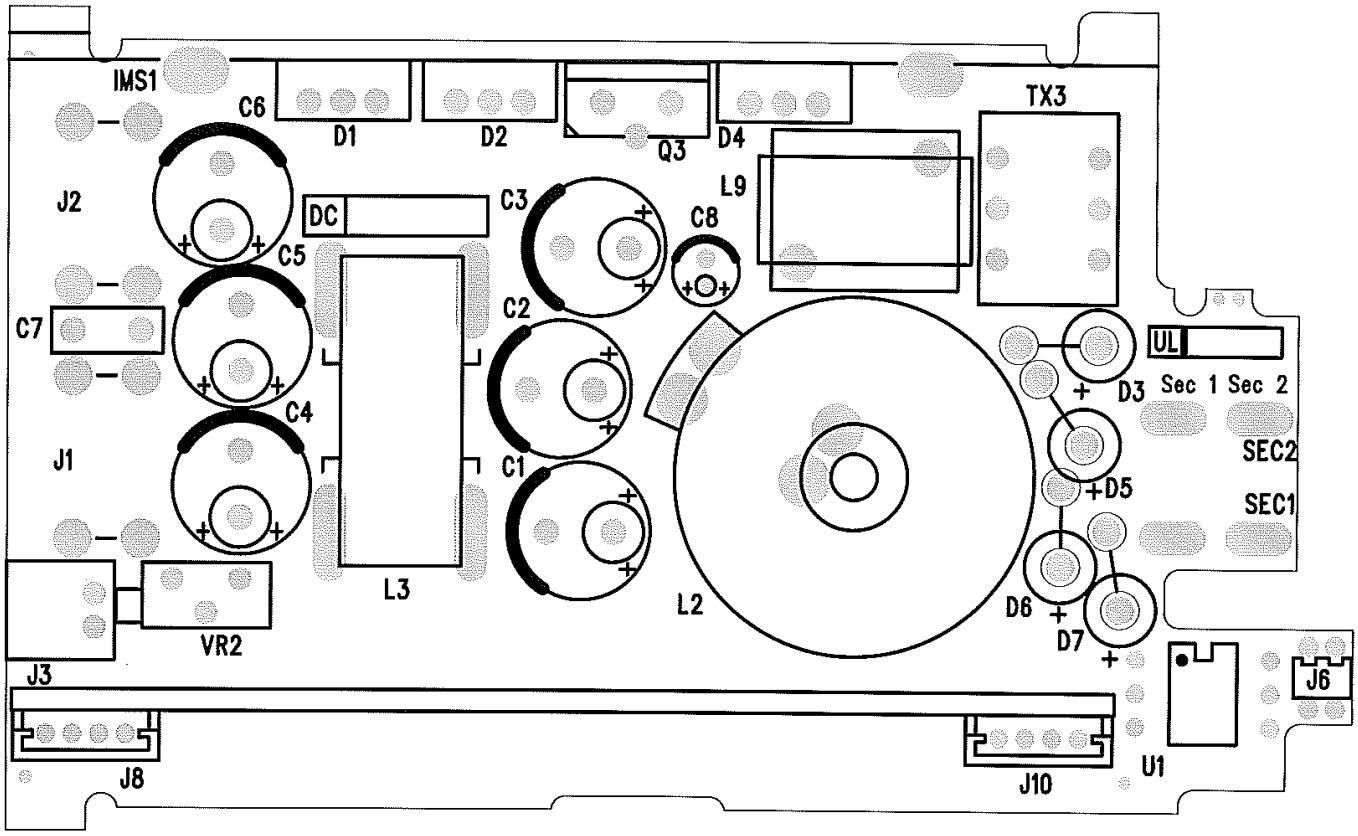

LAYOUT OF VEGA W9 MODULE

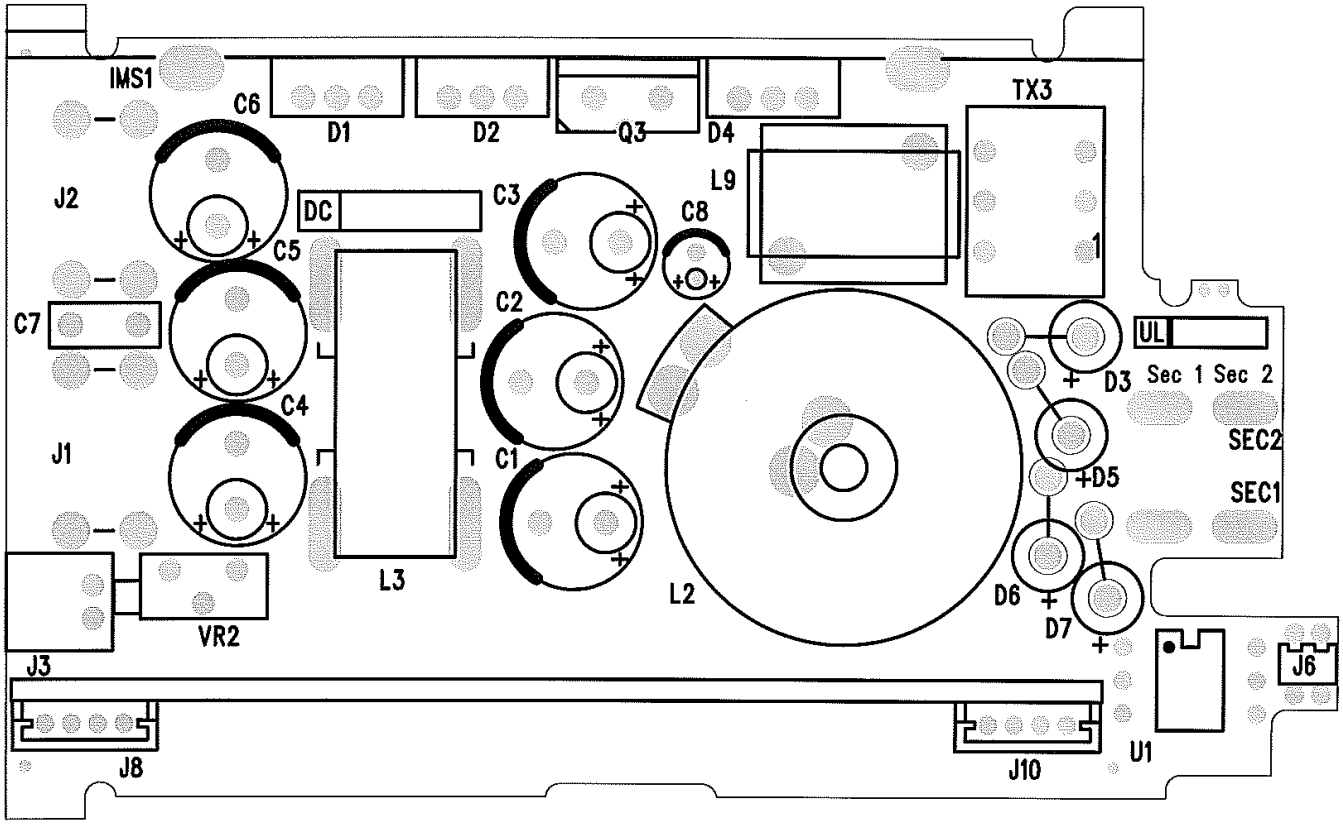

LAYOUT OF VEGA OR-ING MODULE

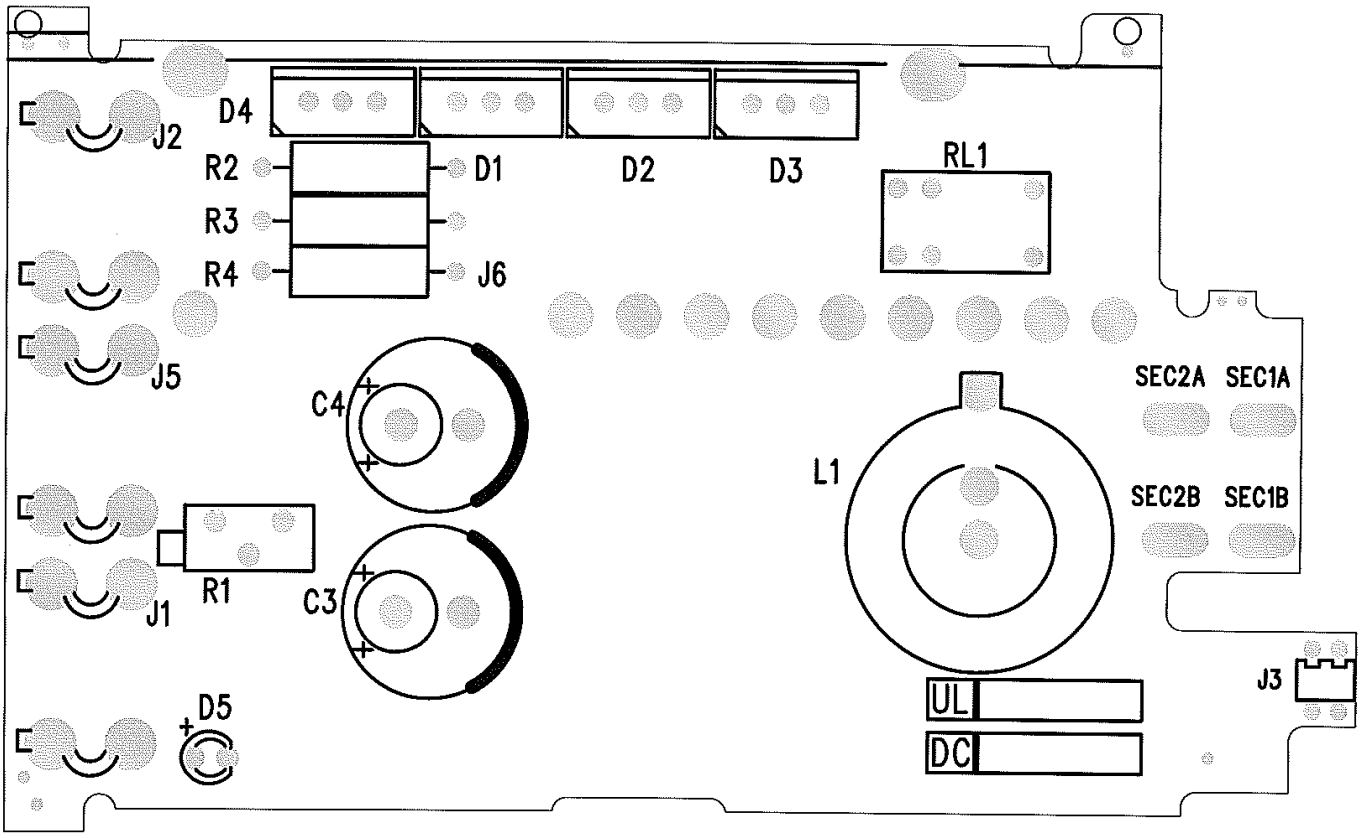

LAYOUT OF VEGA 100mA PRIMARY OPTION

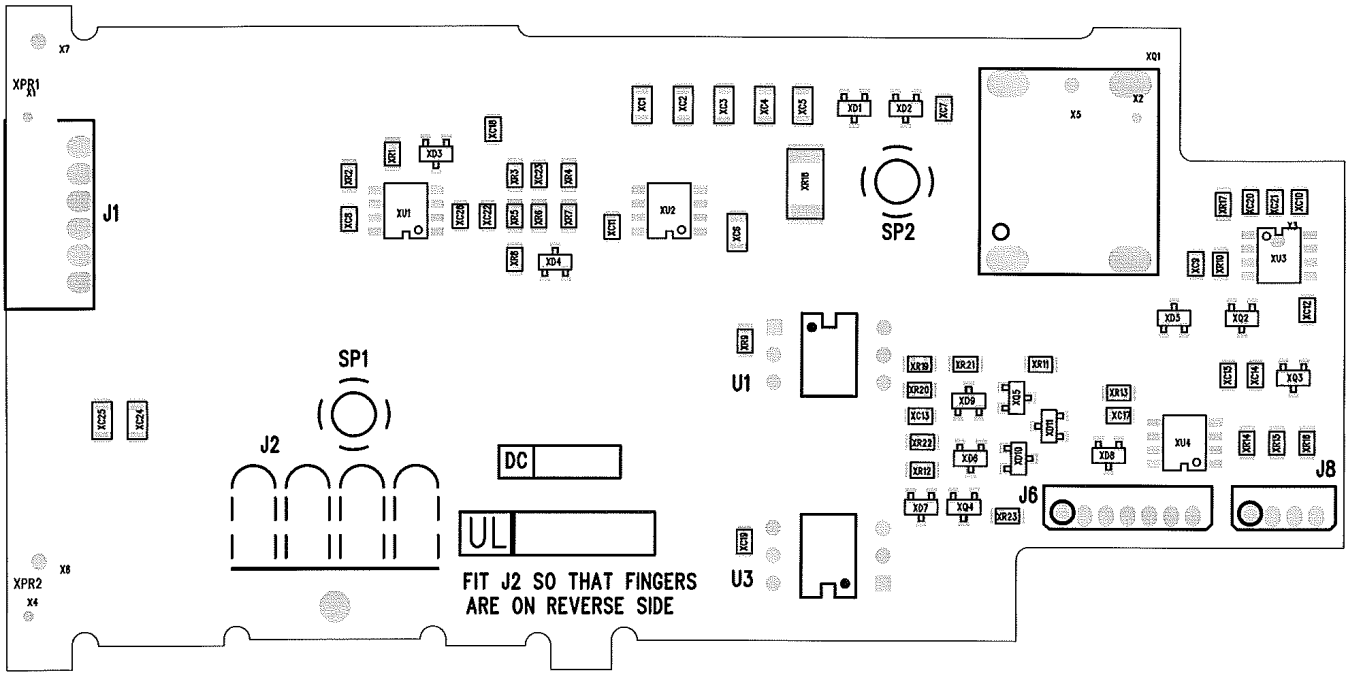

LAYOUT OF VEGA 300mA PRIMARY OPTION

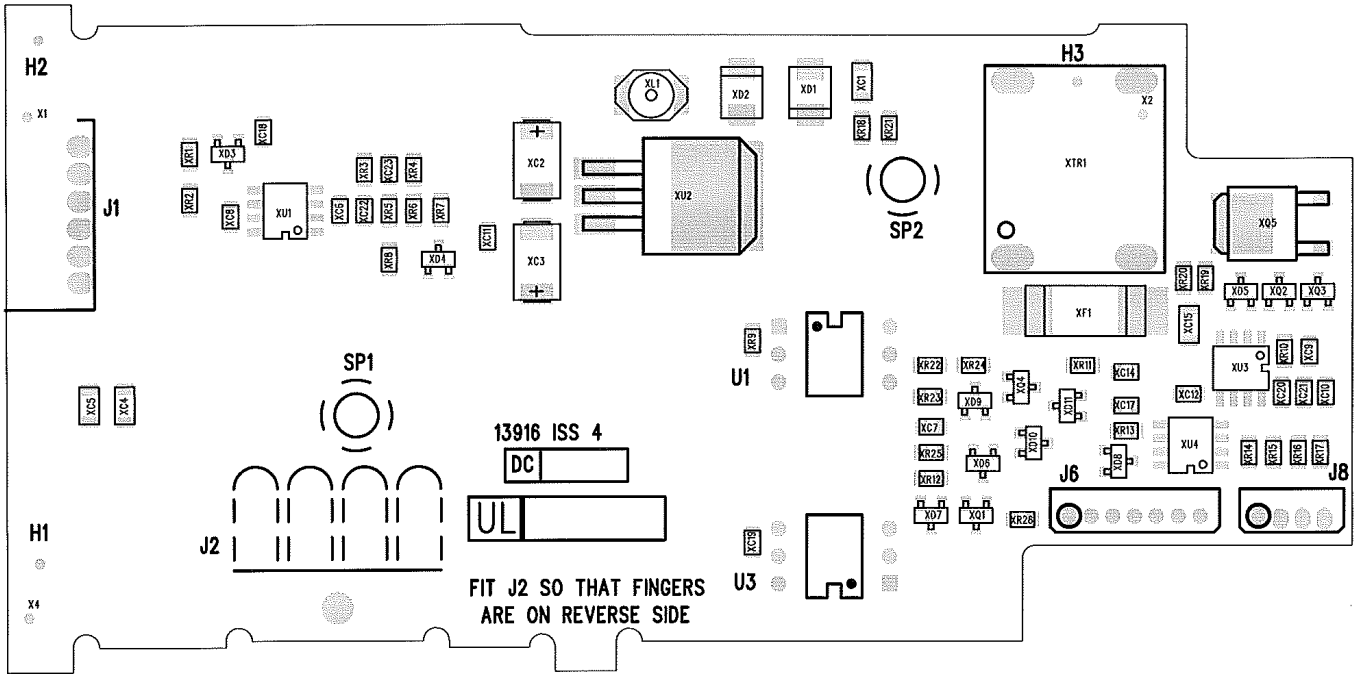

LAYOUT OF VEGA 1A PRIMARY OPTION

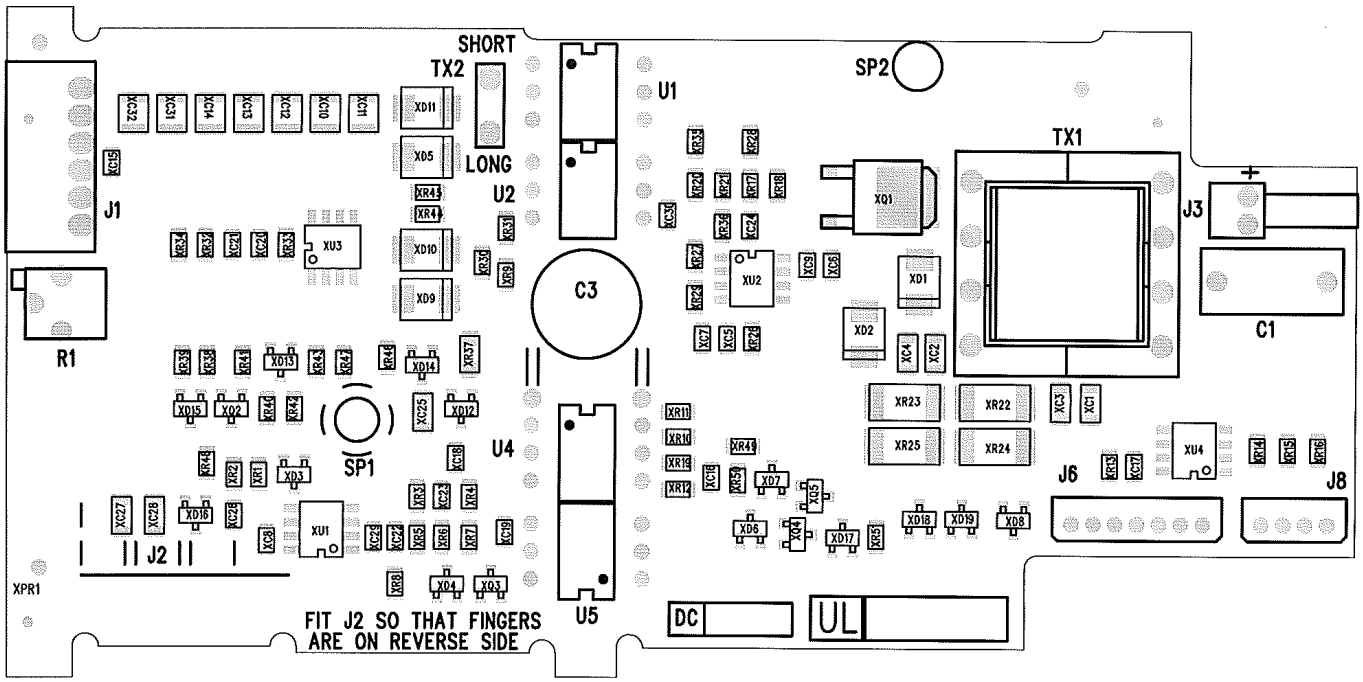

LAYOUT OF VEGA PRIMARY MICRO OPTION

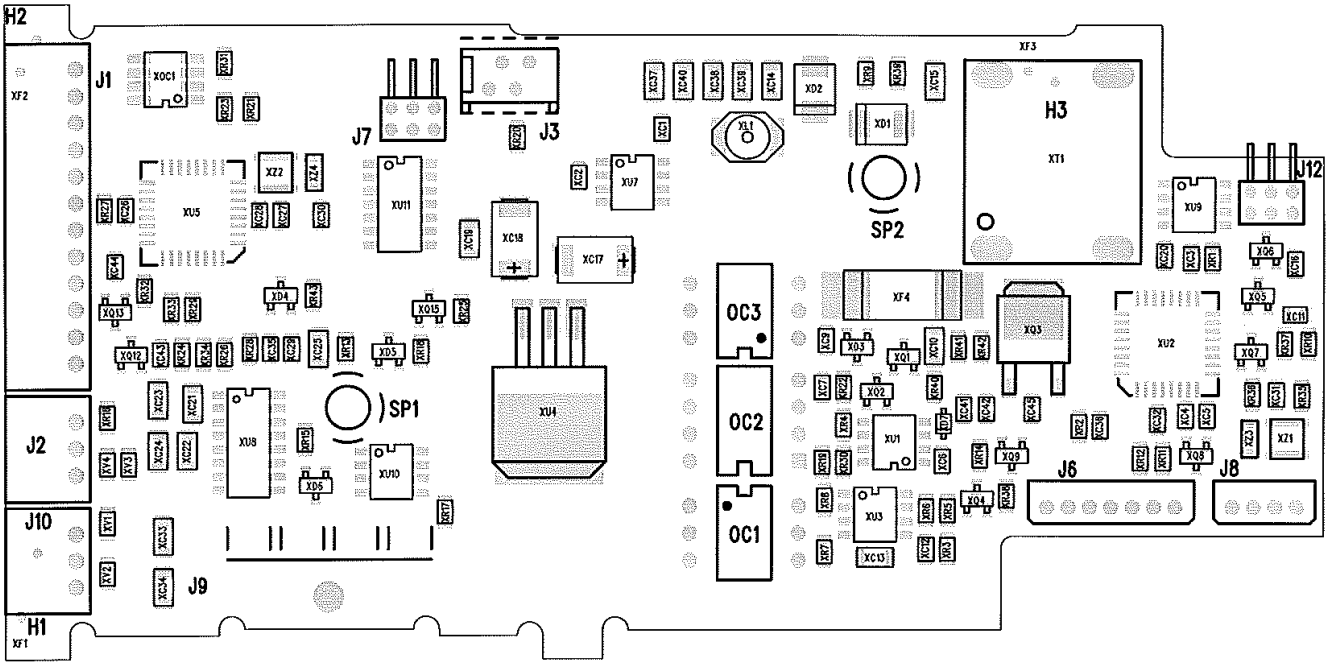

Customer Fixings

Customer Air and Fixing Detail

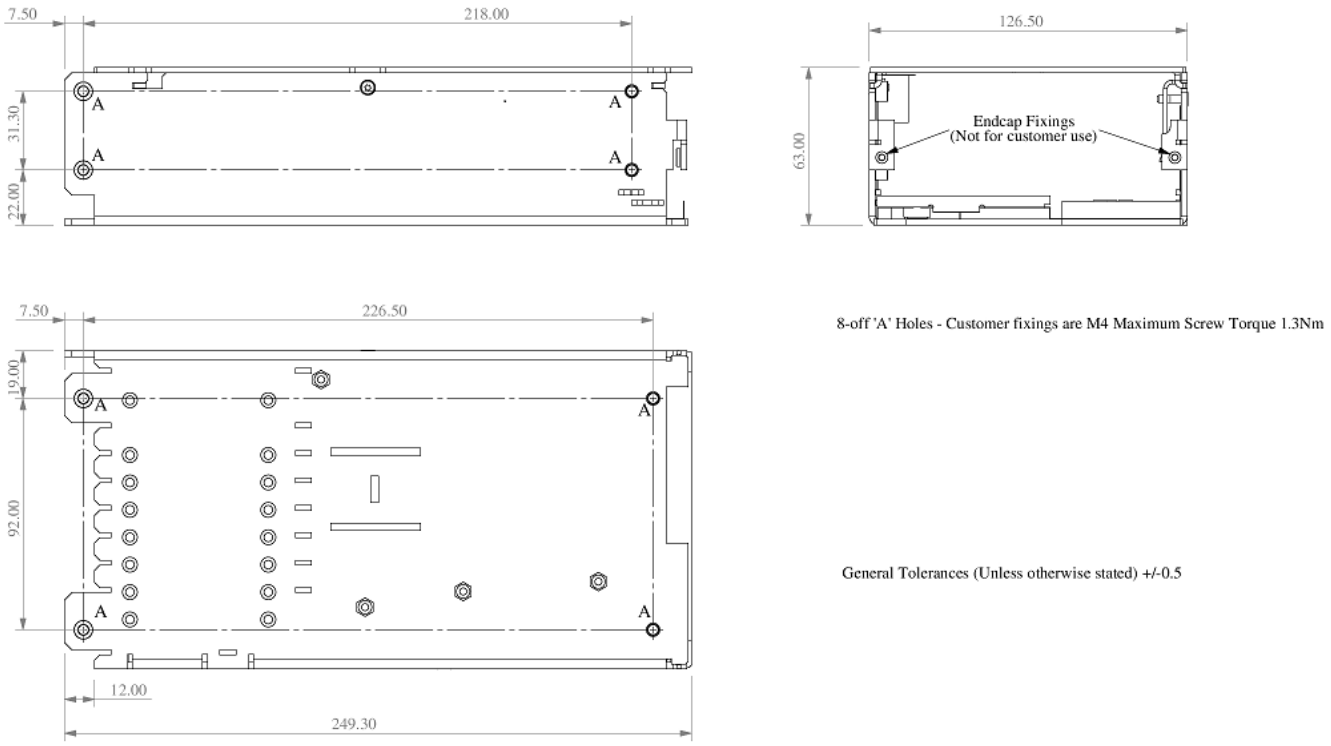

IEC 60320 (Switched) Input

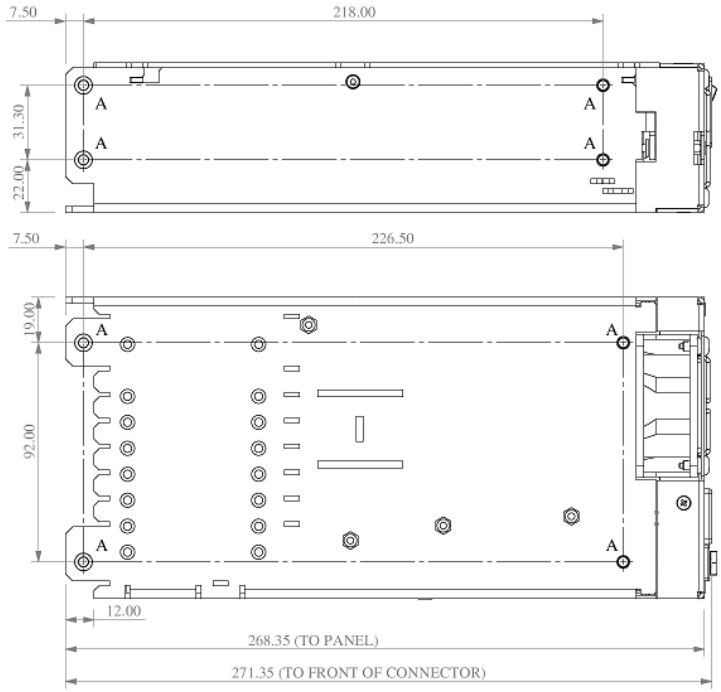

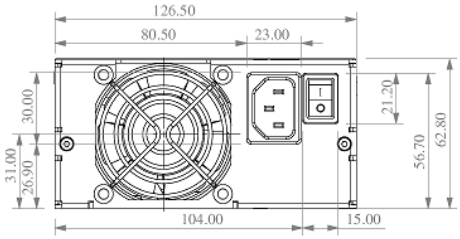

8-off 'A' Holes - Customer fixings are M4 Maximum Screw Torque 1.3Nm

General Tolerances (Unless otherwise stated) +/-0.5

Quick Connect (Faston) Input

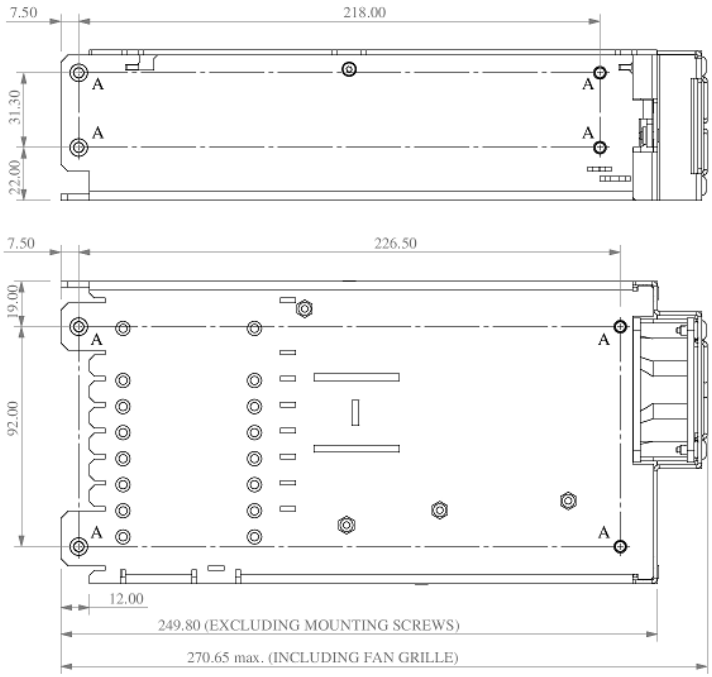

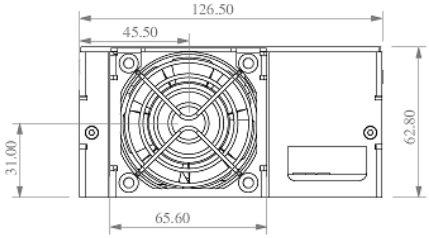

8-off 'A' Holes - Customer fixings are M4 Maximum Screw Torque 1.3Nm

General Tolerances (Unless otherwise stated) +/-0.5

Right Angle Screw Terminal Input

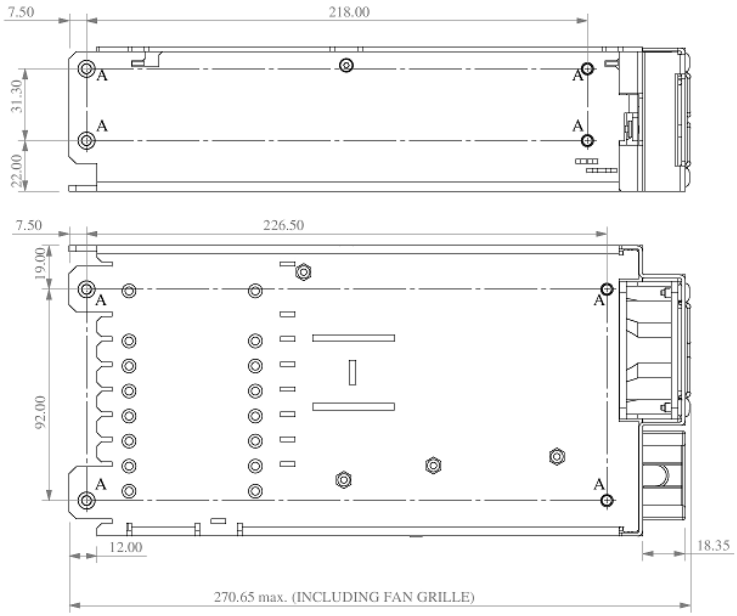

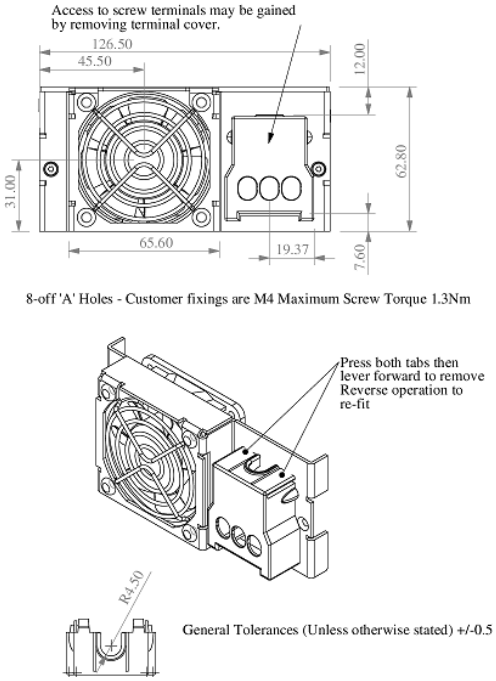

Module Positions

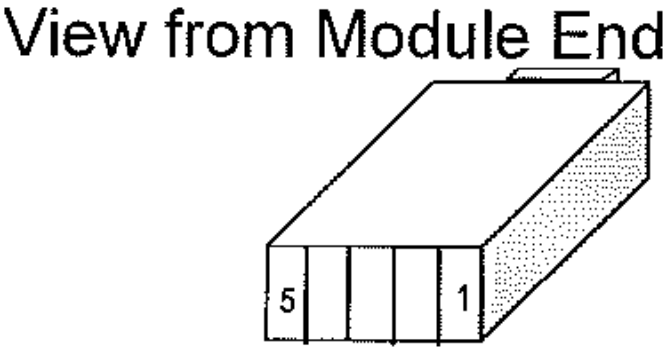

TDK·Lambda
TDK-Lambda UK Ltd
Kingsley Avenue, Ilfracombe
Devon, EX34 8ES
Telephone - Sales and Service +44 (0)1271 856666
Head Office and Works +44 (0)1271 856600
Facsimile +44 (0)1271 864894
WEBSITE: www.uk.tdk-lambda.com