General Safety Instructions:

READ SAFETY INSTRUCTIONS

Servicing:
These products are not customer serviceable. TDK-Lambda UK LTD. and their authorised agents only are permitted to carry out repairs.

Critical Components:
These products are not authorised for use as critical components in nuclear control systems, life support systems or equipment for use in hazardous environments without the express written approval of the Managing Director of TDK-Lambda EMEA.

Product Usage:
These products are designed for use within a host equipment which restricts access to authorised competent personnel.

This product is a component power supply and is only to be installed by qualified persons within other equipment and must not be operated as a stand-alone product.
This product is for sale to business to business customers and can be obtained via distribution channels.
It is not intended for sale to end users.

This product is a component power supply and does not fall within the scope of the EMC directive. Compliance with the EMC directive must be considered in the final installation. Please contact your local TDK-Lambda office

Environmental:
These products are IPX0, and therefore chemicals/solvents, cleaning agents and other liquids must not be used.

Environment:
This power supply is a switch mode power supply for use in applications within a Pollution Degree 2, overvoltage category II environment. Material Group IIIb PCB's are used within it.

Output Loading:
The output power taken from the power supply must not exceed the rating stated on the power supply label, except as stated in the product limitations in this instruction manual.

Input Parameters:
This product must be operated within the input parameters stated in the product limitations in this instruction manual.

End of Life Disposal:
The unit contains components that require special disposal. Make sure that the unit is properly disposed of at the end of its service life and in accordance with local regulations.

RISK OF ELECTRIC SHOCK

High Voltage Warning:
Dangerous voltages are present within the power supply**.** The professional installer must protect service personnel from inadvertent contact with these dangerous voltages in the end equipment.

WARNING: When installed in a Class I end equipment, this product must be reliably earthed and professionally installed.

The (+) or (-) output(s) can be earthed or left floating.

The unit cover(s)/chassis must not be made user accessible.

CAUTION: DOUBLE POLE/NEUTRAL FUSING (Option D, F)

The mains input connector is not acceptable for use as field wiring terminals.

Do not use mounting screws, which penetrate the unit more than 4.5mm.

Special earthing screws are used on these products which connect the cover to the chassis. They must not be removed. If they are removed by mistake, they must be replaced with new ones and the product tested for earth bonding.

An internal fuse protects the unit and must not be replaced by the user. In case of internal defect, the unit must be returned to TDK-Lambda UK LTD or one of their authorised agents.

A suitable mechanical, electrical and fire enclosure must be provided by the end use equipment for mechanical, electric shock and fire hazard protection.

Energy Hazards:
Certain modules are capable of providing hazardous energy (240VA) according to output voltage setting. Final equipment manufacturers must provide protection to service personnel against inadvertent contact with these module output terminals. If set such, that hazardous energy can occur, then the module terminals or connections must not be user accessible.

The power supply contains dangerous voltages and should only be handled by qualified personnel when the power supply has been disconnected from the mains supply voltage for more than 3 minutes.

HOT SURFACE

External Hot Surfaces:
In accordance with local regulations for Health and Safety at work, manufacturers have an obligation to protect service engineers as well as users. In order to comply with this, a label must be fitted to these products which is clearly visible to service personnel accessing the overall equipment, and which legibly warns that surfaces of these products may be hot and must not be touched when the products are in operation.

The unit may be mounted in any orientation except inverted (mounted on its top) or vertical with the airflow downwards.

The ventilation openings on these products must not be impeded. Ensure that there is at least 50mm spacing between any obstruction and the ventilation openings.

The unit cover/chassis is designed to protect skilled personnel from hazards. They must not be used as part of the external covers of any equipment where they may be accessible to operators, since under full load conditions, part or parts of the unit chassis may reach temperatures in excess of those considered safe for operator access.

DEUTSCH

Allgemeine Sicherheitsvorschriften:

LESEN SIE DIE SICHERHEITSVORSCHRIFTEN

Wartung:
Diese Produkte können nicht durch den Kunden gewartet werden. Nur TDK-Lambda UK LTD. und deren zugelassene Vertriebshändler sind zur Durchführung von Reparaturen berechtigt.

Kritische Komponenten:
Diese Produkte sind nicht für die Verwendung als kritische Komponenten in nuklearen Kontrollsystemen, Lebenserhaltungssystemen oder Geräten in gefährlichen Umgebungen geeignet, sofern dies nicht ausdrücklich und in Schriftform durch den Geschäftsführer von TDK-Lambda EMEA genehmigt wurde.

Produktverwendung:
Diese Produkte sind zur Verwendung innerhalb von Host-Anlagen gedacht, die einen auf das Fachpersonal beschränkten Zugang haben.

Dieses Produkt ist eine Stromversorgungs-Komponente und sie darf nur von qualifiziertem Personal in andere Geräte eingebaut werden und sie darf NICHT als eigenständiges ("Stand-Alone") Gerät betrieben werden.
Dieses Produkt ist für den Verkauf an Geschäftskunden entwickelt worden und es kann über Distributionskanäle bezogen werden.
Es ist NICHT für den Verkauf an Endkunden gedacht und konzipiert.

Dieses Produkt ist eine Stromversorgungsbaugruppe und sie fällt NICHT in den Bereich der EMV Direktive.
Die Konformität mit der EMV Richtlinie muss in der finalen Gesamtinstallation betrachtet werden.
Bitte kontaktieren Sie Ihr regionales TDK-Lambda Vertriebsbüro im Falle von Rückfragen.

Umwelt:
Diese Produkte sind IPX0, aus diesem Grund dürfen keine Chemikalien/Lösungsmittel, Reinigungsmittel und andere Flüssigkeiten verwendet werden.

Umgebung:
Dieses Netzteil ist ein Schaltnetzteil zur Verwendung in einer Umgebung mit einem Verschmutzungsgrad 2, Überspannungskategorie II. Materialgruppe IIIb mit darin verwendeten PCBs.

Ausgangsstrom:
Der Ausgangsstrom des Netzteiles darf die Leistung, die auf dem Label des Netzteiles vermerkt ist, nur dann überschreiten, wenn dies in den Produktgrenzen dieses Handbuches ausgezeichnet ist.

Eingangsparameter:
Dieses Produkt muss innerhalb der Eingangsparameter, die in den Produktgrenzen dieses Handbuches angegeben sind, betrieben werden.

Entsorgung am Ende der Betriebszeit:
Das Gerät enthält Komponenten die unter Sondermüll fallen. Das Gerät muss am Ende der Betriebszeit ordnungsgemäß und in Übereinstimmung mit den regionalen Bestimmungen entsorgt werden.

GEFAHR DURCH ELEKTRISCHEN SCHLAG

Hochspannungswarnung:
Innerhalb des Netzteiles gibt es gefährliche Spannungen. Der Elektroinstallateur muss das Wartungspersonal vor versehentlichem Kontakt mit den gefährlichen Spannungen im Endgerät schützen.

WARNUNG! Falls Sie unser Netzgerät in eine Anwendung mit Schutzklasse 1 eingebaut haben, stellen Sie sicher, dass es fachgerecht installiert und zuverlässig geerdet ist.
Die (+) oder (-) Ausgänge können geerdet werden oder unangeschlossen bleiben.

Die Abdeckung des Gerätes/das Gehäuse darf für den Benutzer nicht zugänglich sein.

ACHTUNG: ZWEIPOLIGE/NEUTRALE SICHERUNG (Option D, F)

Der Haupteingangsanschluss ist nicht für die Verwendung als Feldverdrahtungsanschluss geeignet.

Verwenden Sie keine Befestigungsschrauben, die mehr als 4.5mm in das Gerät eindringen.

Zur Befestigung der Abdeckung am Gehäuse werden für diese Produkte spezielle Erdungsschrauben verwendet. Diese dürfen nicht entfernt werden. Sollten sie versehentlich entfernt werden, müssen sie durch neue ersetzt und das Produkt auf Erdschluss geprüft werden.

Eine interne Sicherung schützt das Gerät und darf durch den Benutzer nicht ausgetauscht werden. Im Fall von internen Defekten muss das Gerät an TDK-Lambda UK LTD oder einen der autorisierten Vertriebshändler zurückgeschickt werden.

Ein geeignetes mechanisches, elektrisches und brandgeschütztes Gehäuse muss als Schutz vor der Gefahr von mechanischen Risiken, Stromschlägen und Brandschutz in dem Endgerät vorgesehen werden.

Gefahren durch elektrische Energie:
Von bestimmten Modulen kann je nach Einstellung der Ausgangsspannung gefährliche elektrische Energie ausgehen (240 VA). Die Endgerätehersteller müssen einen Schutz für Servicepersonal vor unbeabsichtigtem Kontakt mit den Ausgangsanschlüssen dieser Module vorsehen. Kann aufgrund der Einstellung gefährliche elektrische Energie auftreten, dürfen die Modulanschlüsse für den Benutzer nicht zugänglich sein.

Das Netzteil steht unter hoher Spannung und sollte deshalb mindestens 3 Minuten vom Netz getrennt sein. Die Bedienung darf nur durch Fachpersonal erfolgen

HEISSE OBERFLÄCHEN

Äußere heiße Oberflächen:
In Übereinstimmung mit den regionalen Bestimmungen für Gesundheit und Sicherheit bei der Arbeit ist der Hersteller für den Schutz von Wartungspersonal und Benutzern verantwortlich. Um diesen Bestimmungen gerecht zu werden, muss auf den Produkten ein Label angebracht werden, das deutlich sichtbar für das Wartungspersonal mit Zugriff auf die gesamte Anlage ist, und das gut lesbar auf die eventuell heiße Oberfläche des Gerätes hinweist und das Berühren des Produktes in Betrieb untersagt.

Das Gerät darf in jeder Position befestigt werden, mit Ausnahme über Kopf (umgekehrt) oder vertikal mit dem Luftstrom abwärts.

Die Belüftungsöffnungen an diesem Produkt dürfen nicht blockiert werden. Achten Sie darauf, dass mindestens 50 mm Abstand zwischen Hindernissen und den Belüftungsöffnungen bleibt.

Die Geräteabdeckung/das Gehäuse ist so entworfen, dass das Fachpersonal vor Gefahren geschützt wird. Sie dürfen nicht als Teil der externen Abdeckung für Geräte verwendet werden, die für den Betreiber zugänglich sein müssen, da Teile oder das gesamte Gerätegehäuse unter voller Auslastung übermäßige Temperaturen erreichen kann, die für den Zugang des Betreibers nicht mehr als sicher betrachtet werden.

FRANÇAIS

Consignes générales de sécurité:

LIRE LES CONSIGNES DE SECURITE

Entretien:
Ces produits ne peuvent pas être réparés par l'utilisateur. Seuls, TDK-Lambda UK LTD et ses agents agréés sont autorisés à effectuer des réparations.

Composants critiques:
Ces produits ne doivent pas être utilisés en tant que composants critiques dans des systèmes de commande nucléaire, dans des systèmes de sauvetage ou dans des équipements utilisés dans des environnements dangereux, sans l'autorisation écrite expresse du directeur général de TDK-Lambda EMEA.

Utilisation du produit:
Ces produits sont conçus pour être utilisés dans un équipement hôte dont l'accès n'est autorisé qu'aux personnes compétentes.

Ce produit est une alimentation considérée comme un composant devant être installé par des personnes qualifiées, dans un autre équipement. Il ne doit pas être utilisé en tant que produit fini.
Ce produit est destiné à la vente entre entreprises et peut être obtenu via des canaux de distribution.
Il n'est pas prévu à la vente pour les particuliers.

Ce produit est une alimentation considérée comme un composant, il ne relève pas du champ d'application de la directive CEM. Le respect de la directive CEM doit être pris en compte dans l'installation finale. Veuillez contacter votre bureau TDK-Lambda le plus proche.

Environnement:
Ces produits sont IPX0, et donc on ne doit pas utiliser des produits chimiques/solvants, des produits de nettoyage et d'autres liquides.

Environnement fonctionnel:
Cette alimentation fonctionne en mode commutation pour utilisation dans des applications fonctionnant dans un environnement avec Degré de Pollution 2 et catégorie de surtension II. Elle utilise des cartes des circuits imprimés (PCB) de Groupe IIIb.

Intensité soutirée:
L'intensité soutirée de l'alimentation ne doit pas dépasser l'intensité nominale marquée sur la plaque signalétique, sauf indications contraires dans les limitations du produit décrit dans ce manuel."

Paramètres d'entrée:
Ce produit doit être utilisé à l'intérieur des paramètres d'entrée indiqués dans les limitations du produit dans ce manuel.

Elimination en fin de vie:
L'alimentation contient des composants nécessitant des dispositions spéciales pour leur élimination. Vérifiez que cette alimentation est mise au rebut correctement en fin de vie utile et conformément aux réglementations locales en vigueur."

RISQUE DE CHOC ELECTRIQUE

Attention-Danger haute tension:
Des tensions dangereuses sont présentes dans l'alimentation. L'installateur doit protéger le personnel d'entretien contre un contact involontaire avec ces tensions dangereuses dans l'équipement final.

AVERTISSEMENT: Si ce produit est installé dans un équipement final de classe I, il doit être mis à la terre de manière fiable et installé par un professionnel averti.
Les sorties (+) ou (-) peuvent être raccordées à la terre ou laissées flottantes.

Le couvercle/châssis de l'alimentation ne doit pas être accessible à l'utilisateur.

ATTENTION : FUSIBLE BIPOLAIRE/NEUTRE (Option D, F)

Le connecteur d'entrée d'alimentation principale ne doit pas être utilisé comme borne de raccordement.

N'utilisez pas de vis pénétrant dans le module sur une profondeur supérieure à 4.5mm.

Des vis de terre spéciales sont utilisées sur ces produits pour raccorder le couvercle au châssis. Elles ne doivent pas être enlevées. Si elles sont enlevées par erreur, elles doivent être remplacées et le produit doit être testé pour vérifier que le raccordement à la terre est correct.

Un fusible interne protège le module et ne doit pas être remplacé par l'utilisateur. En cas de défaut interne, le module doit être renvoyé à TDK-Lambda UK LTD ou l'un de ses agents agréés.

Une enceinte appropriée doit être prévue par l'utilisateur final pour assurer la protection contre les chocs mécaniques, les chocs électriques et l'incendie.

Energies dangereuses:
Certains modules peuvent générer une énergie dangereuse (240 VA) selon le réglage de tension de sortie. Le fabricant de l'équipement final doit assurer la protection des techniciens d'entretien contre un contact involontaire avec les bornes de sortie de ces modules. Si une telle tension dangereuse risque de se produire, les bornes ou les connexions du module ne doivent pas être accessibles par l'utilisateur.

L'alimentation délivre des tensions dangereuses et doit seulement être manipulée par du personnel qualifié quand celle-ci a été déconnectée du secteur pendant plus de 3 minutes.

SURFACE CHAUDE

Surfaces chaudes extérieures:
Conformément aux réglementations locales concernant la santé et la sécurité sur les lieux de travail, les fabricants doivent protéger les techniciens d'entretien et les utilisateurs. Pour cela, une plaque signalétique doit être installée sur ces produits, et cette plaque doit être bien visible pour les techniciens d'entretien intervenant sur l'équipement, et elle doit indiquer de manière bien visible par les surfaces de ces produits peuvent être chaudes et qu'elles ne doivent pas être touchées lorsque les produits fonctionnent.

Le module peut être monté suivant une orientation quelconque, sauf en position inversée (monté sur son sommet) ou en position verticale avec écoulement d'air descendant.

Les orifices de ventilation sur ces produits ne doivent pas être obstrués. Vérifiez qu'il y a un espace libre d'au moins 50 mm entre une obstruction et les orifices de ventilation.

Le couvercle et le châssis du module sont conçus pour protéger des personnels expérimentés. Ils ne doivent pas être utilisés comme couvercles extérieurs d'un équipement, accessible aux opérateurs car en condition de puissance maximum, des parties du châssis peuvent atteindre des températures considérées comme dangereuses pour l'opérateur.

ITALIANO

Norme generali di sicurezza:

SI PREGA DI LEGGERE LE NORME DI SICUREZZA

Manutenzione:
Il cliente non può eseguire alcuna manutenzione su questi prodotti. L'esecuzione delle eventuali riparazioni è consentita solo a TDK-Lambda UK LTD e ai suoi agenti autorizzati.

Componenti critici:
Non si autorizza l'uso di questi prodotti come componenti critici all'interno di sistemi di controllo nucleari, sistemi necessari alla sopravvivenza o apparecchiature destinate all'impiego in ambienti pericolosi, senza l'esplicita approvazione scritta dell'Amministratore Delegato di TDK-Lambda EMEA.

Uso dei prodotti:
Questi prodotti sono progettati per l'uso all'interno di un'apparecchiatura ospite che limiti l'accesso al solo personale competente e autorizzato.

Questo prodotto è da considerarsi come un alimentatore professionale componente e come tale deve essere installato da personale qualificato all'interno di altre apparecchiature e non può essere utilizzato come prodotto indipendente.
Questo prodotto non è inteso per la vendita al dettaglio o agli utilizzatori finali.

Questo alimentatore è da considerarsi come un componente e come tale non è assogettato dagli scopi della direttiva EMC. Conformità alla direttiva EMC deve essere considerata nell'installazione finale di utilizzo. Gli uffici di TDK-Lambda Sas Succursale Italiana sono a vostra disposizione per ulteriori ragguagli.

Condizioni ambientali:
Questi prodotti sono classificati come IPX0, dunque non devono essere utilizzati sostanze chimiche/solventi, prodotti per la pulizia o liquidi di altra natura.

Ambiente:
Questo prodotto è un alimentatore a commutazione, destinato all'uso in applicazioni rientranti in ambienti con le seguenti caratteristiche: Livello inquinamento 2, Categoria sovratensione II. Questo prodotto contiene schede di circuiti stampati in materiali di Gruppo IIIb.

Carico in uscita:
La potenza in uscita ottenuta dall'alimentatore non deve superare la potenza nominale indicata sulla targhetta dell'alimentatore, fatto salvo dove indicato nei limiti per i prodotto specificati in questo manuale.

Parametri di alimentazione:
Questo prodotto deve essere utilizzato entro i parametri di alimentazione indicati nei limiti per il prodotto, specificati in questo manuale."

Smaltimento:
L'unità contiene componenti che richiedono procedure speciali di smaltimento. Accertarsi che l'unità venga smaltita in modo corretto al termine della vita utile e nel rispetto delle normative locali.

RISCHIO DI SCOSSA ELETTRICA

Avvertimento di alta tensione:
All'interno dell'alimentatore sono presenti tensioni pericolose. Gli installatori professionali devono proteggere il personale di manutenzione dal rischio di contatto accidentale con queste tensioni pericolose all'interno dell'apparecchiatura finale.

ATTENZIONE: Se installato in un'attrezzatura di classe I, questo prodotto deve essere collegato a terra in modo affidabile ed installato in modo professionale.

Le uscite (+) o (-) possono essere messa a terra o lasciate isolate.

I coperchi/il telaio dell'unità non devono essere accessibili da parte dell'utente.

ATTENZIONE: PROTEZIONE CON FUSIBILE BIPOLARE/NEUTRO (Opzione D, F)

Il connettore dell'alimentazione principale non può essere utilizzato come terminale di collegamento di campo.

Non utilizzare viti che penetrano nell'unità per più di 4.5mm.

Per questi prodotti vengono usate viti speciali di messa a terra, che collegano il coperchio al telaio. Tali viti non devono essere rimosse. Se le viti vengono tolte per errore, vanno sostituite con nuove viti ed occorre testare il prodotto per verificarne il collegamento a massa.

Un fusibile interno protegge l'unità e non deve essere sostituito dall'utente. Nell'eventualità di un difetto interno, restituire l'unità a TDK-Lambda UK LTD o a uno dei suoi agenti autorizzati.

L'apparecchiatura finale deve includere una recinzione meccanica, elettrica e antincendio per proteggere dai pericoli di natura meccanica, dalle scosse elettriche e dai pericoli di incendio.

Pericoli energetici:
Alcuni moduli sono in grado di erogare energia pericolosa (240 VA) a seconda della tensione in uscita impostata. I produttori delle apparecchiature finali sono tenuti a proteggere il personale di manutenzione dal rischio di contatto accidentale con questi terminali dei moduli di uscita. Se impostati su livelli che non escludono l'erogazione di energia pericolosa, questi terminali o collegamenti non devono risultare accessibili da parte dell'utente.

L'alimentatore contiene tensioni pericolose e deve essere gestito da personale qualificato previo scollegamento dalla tensione di rete da più di 3 minuti

SUPERFICIE CALDA

Superfici esterne calde:
Coerentemente con le norme locali in materia di salute & sicurezza professionali, i produttori sono tenuti a salvaguardare i tecnici di manutenzione, e inoltre gli utenti. Per far fronte a tali obblighi, i prodotti devono presentare una targhetta, chiaramente visibile al personale di manutenzione che accede all'apparecchiatura nel complesso e che risulti inoltre leggibile e avverta gli addetti del rischio che le superfici di questi prodotti possono scottare e non vanno toccate con i prodotti in funzione.

L'unità può essere installata in qualunque orientamento, ma non in posizione capovolta o in posizione verticale con il flusso dell'aria rivolto verso il basso.

Le griglie di ventilazione su questi prodotti non devono essere ostruite. Verificare che vi sia una distanza minima di 50 mm fra le griglie di ventilazione e qualsiasi eventuale ostruzione.

Il coperchio/telaio dell'unità è realizzato per proteggere il personale esperto dai pericoli. Non deve essere usato come parte degli involucri esterni di qualsiasi apparecchiatura, se risulta accessibile da parte degli addetti, poiché è possibile che in condizioni di pieno carico una o più parti del telaio dell'unità giunga/giungano a temperature superiori ai limiti considerati sicuri per l'accesso da parte degli addetti.

ESPAÑOL

Instrucciones generales de seguridad:

LEA LAS INSTRUCCIONES DE SEGURIDAD

Servicio:
Estos productos no pueden ser reparados por los clientes. TDK-Lambda UK LTD. y sus agentes autorizados son los únicos que pueden llevar a cabo las reparaciones.

Componentes fundamentales:
Estos productos no pueden ser utilizados como componentes fundamentales en sistemas de control nuclear, sistemas de soporte vital o equipos a utilizar en entornos peligrosos sin el consentimiento expreso por escrito del Director General de TDK-Lambda EMEA.

Uso de los productos:
Estos productos han sido diseñados para ser utilizados en un equipo central que restrinja el acceso al personal cualificado autorizado.

Este producto es una fuente de alimentación y sólo puede ser instalado por personal cualificado dentro de otros equipos y no debe ser tratado como un producto independiente. Este producto debe ser vendido entre empresas profesionales y solo puede obtenerse a través de los canales de distribución .No está destinado para la venta a usuarios finales

Este producto es una fuente de alimentación y no se ve afectada por la directiva EMC . El cumplimiento de la directiva EMC se debe considerar en la instalación final . Por favor, póngase en contacto con su oficina local de TDK - Lambda

Medioambiental:
Estos productos son IPX0 y, por tanto, no pueden utilizarse sustancias químicas/disolventes, agentes de limpieza ni otros líquidos.

Medio ambiente:
Esta fuente de alimentación es una fuente de alimentación de modo conmutado a utilizar en aplicaciones dentro de un entorno con un Grado de contaminación 2 y una Categoría de sobretensión II. En él se utilizan policloruros de bifenilo del Grupo de materiales IIIb.

Carga de salida:
La potencia de salida tomada de la fuente de alimentación no puede sobrepasar el valor nominal indicado en la etiqueta de la fuente de alimentación, excepto en los casos indicados en las limitaciones del producto en este manual.

Parámetros de entrada:
Este producto debe ser utilizado dentro de los parámetros de entrada indicados en las limitaciones del producto en este manual.

Desecho de la unidad:
La unidad contiene componentes que deben ser desechados de una manera especial. Asegúrese de desechar correctamente la unidad al final de su vida útil y conforme a las normas locales vigentes.

PELIGRO DE DESCARGAS ELÉCTRICAS

Advertencia de alta tensión:
En esta fuente de alimentación hay tensiones peligrosas. El instalador profesional debe proteger al personal de servicio contra cualquier contacto accidental con estas tensiones peligrosas en el equipo final.

ADVERTENCIA: La instalación de este producto en un equipo de clase I la deben llevar a cabo profesionales y el producto debe estar conectado a tierra.
La salida o salidas (+) o (-) pueden conectarse a tierra o se las puede dejar flotando.

Debe impedirse el acceso de los usuarios a la cubierta o cubiertas y al chasis de la unidad.

PRECAUCIÓN: PROTECCIÓN POR FUSIBLES BIPOLAR/NEUTRA (Opción D, F)

El conector de entrada de la red no es apto para ser utilizado a modo de bornes de cableado de campo.

No utilice tornillos de montaje susceptibles de penetrar en la unidad más de 4.5 mm.

Con estos productos se utilizan unos tornillos de puesta a tierra especiales que conectan la cubierta al chasis. No se deben quitar en ningún caso. En caso de quitarlos por error, hay que reemplazarlos por unos nuevos y comprobar la conexión a tierra del producto.

Un fusible interno protege la unidad y este no debe ser nunca reemplazado por el usuario. En caso de existir algún defecto interno, la unidad debe ser enviada a TDK-Lambda UK LTD o a uno de sus agentes autorizados.

El equipo de uso final debe constituir un recinto de protección mecánica, eléctrica y contra incendios de protección mecánica, contra descargas eléctricas y contra el peligro de incendios.

Peligros de energía:
Algunos módulos pueden generar energía peligrosa (240VA) dependiendo de la configuración de la tensión de salida. Los fabricantes de equipos finales deben proteger al personal de servicio contra un contacto accidental con estos bornes de salida de los módulos. Si se configura de modo que pueda generarse energía peligrosa, hay que evitar que el usuario pueda acceder a los bornes o conexiones del módulo.

El suministro eléctrico contiene tensiones peligrosas y, en caso de que se haya desconectado de la alimentación principal durante más de 3 minutos, deberá ser manipulado únicamente por personal cualificado.

SUPERFICIE CALIENTE

Superficies externas calientes:
Según las normas locales relativas a la Salud y Seguridad en el trabajo, los fabricantes están obligados a proteger a los ingenieros de servicio además de a los usuarios. Para que esto se cumpla, debe colocarse una etiqueta en estos productos que pueda ser vista claramente por el personal de servicio que accede al equipo general, y con advertencias legibles de que las superficies de estos productos pueden estar calientes y no deben tocarse cuando los productos se encuentran en funcionamiento.

La unidad se puede montar en cualquier orientación excepto invertida (montada sobre su parte de arriba) o vertical con los orificios para el flujo de aire mirando hacia abajo.

Las aberturas de ventilación de estos productos no deben obstruirse jamás. Asegúrese de que quede una separación de 50 mm por lo menos entre cualquier obstrucción y las aberturas de ventilación.

La cubierta/chasis de la unidad ha sido diseñada para que proteja a las personas cualificadas de los peligros. No deben ser utilizadas como parte de las cubiertas externas de cualquier equipo al que pueden acceder los operarios, ya que bajo unas condiciones de carga completa, la pieza o piezas del chasis de la unidad pueden alcanzar temperaturas superiores a las consideradas seguras para el acceso de los operarios.

PORTUGUÊS

Instruções gerais de segurança:

LEIA AS INSTRUÇÕES DE SEGURANÇA

Manutenção:
Estes produtos não são podem ser submetidos a manutenção por parte do cliente. Apenas a TDK-Lambda UK LTD e os seus agentes autorizados têm permissão para realizar reparações.

Componentes essenciais:
Não é autorizada a utilização destes produtos como componentes essenciais de sistemas de controlo nuclear, sistemas de suporte de vida ou equipamento para utilização em ambientes perigosos sem a expressa autorização por escrito do Director-Geral da TDK-Lambda EMEA.

Utilização do produto:
Estes produtos foram concebidos para utilização dentro de um equipamento de alojamento que apenas permita o acesso a pessoal qualificado autorizado.

Este produto é uma alimentaçao considerado com um componente para ser instalado por pessoas qualificadas, em outros equipamentos. Não deve ser usado como um produto acabado.
Este produto é destinado para venda entre as empresas e pode ser obtido através de canais de distribuição. Não se destina à venda aos particulares

Este produto é uma alimentaçao considerado com um componente, não é dentro do appliquation âmbito da directiva CEM.
Conformidade com a directiva CEM devem ser considerados na instalação final.
Entre em contacto com seu escritório TDK-Lambda mais próximo.

Ambiental:
Estes produtos são IPX0 e, como tal, não se devem utilizar químicos/solventes, agentes de limpeza e outros líquidos.

Am**biente:**
Esta fonte de alimentação é uma fonte de alimentação do modo de comutação para utilização em aplicações com um Nível de Poluição 2 e ambientes da categoria de sobretensão II. São utilizadas placas de circuitos impressos do grupo de materiais IIIb.

Carga de saída:
A potência de saída extraída da fonte de alimentação não deve exceder a classificação assinalada na etiqueta da fonte de alimentação, excepto quando indicado nas limitações do produto neste guia.

Parâmetros de entrada:
Este produto deve ser utilizado dentro dos parâmetros de entrada indicados nas limitações do produto neste guia.

Eliminação no fim de vida:
A unidade contém componentes que necessitam de procedimentos especiais de eliminação. Certifique-se de que a unidade é devidamente eliminada no fim da sua vida útil e que tal é feito em conformidade com os regulamentos locais.

RISCO DE CHOQUE ELÉCTRICO

Aviso de alta tensão:
Estão presentes tensões perigosas dentro da fonte de alimentação. O profissional que realizar a instalação deve proteger o pessoal de assistência contra contactos inadvertidos com estas tensões perigosas do equipamento final.

AVISO: Quando instalado num equipamento de Classe I, este produto deve ser ligado à terra de forma fiável e instalado por um profissional.
As saídas (+) e (-) podem ser ligadas à terra ou deixadas soltas.

O chassis/cobertura(s) da unidade não deve estar acessível ao utilizador.

CUIDADO: LIGAÇÃO DE FUSÍVEIS DE DOIS PÓLOS/NEUTRA (Opção D, F)

O conector de entrada de alimentação não deve ser utilizado como terminal de cablagens no local.

Não utilize parafusos de montagem, uma vez que estes penetrarão na unidade em mais do que 4.5mm.

Nestes produtos utilizam-se parafusos especiais de ligação à terra, que ligam a cobertura ao chassis. Não devem ser removidos. Se forem removidos por engano, deverão ser substituídos por parafusos novos, devendo-se testar a ligação à terra do produto.

Existe um fusível interno que protege a unidade e que não deve ser substituído pelo utilizador. Em caso de defeito interno, a unidade deve ser devolvida à TDK-Lambda UK LTD ou a um dos seus agentes autorizados.

O equipamento de utilização final deve fornecer um bastidor com protecção mecânica, eléctrica e contra incêndios adequada.

Perigos de energia:
Alguns módulos tem a capacidade de fornecer energia perigosa (240 VA), de acordo com a configuração da tensão de saída. O equipamento final do fabricante deve garantir que o pessoal de assistência está protegido contra contactos inadvertidos com estes terminais de saída do módulo. Se essa energia perigosa for produzida, as ligações e os terminais do módulo não devem ser acessíveis pelos utilizadores.

A fonte de alimentação contém tensões perigosas e apenas deve ser manuseada por pessoal qualificado quando a fonte de alimentação tiver sido desligada da tensão de alimentação elétrica há mais de 3 minutos.

SUPERFÍCIE QUENTE

Superfícies quentes externas:
Segundo com os regulamentos locais sobre saúde e segurança no local de trabalho, os fabricantes têm a obrigação de proteger os técnicos de manutenção, bem como os utilizadores. De forma a respeitar este regulamento, estes produtos deverão ter uma etiqueta que seja facilmente visível ao pessoal de assistência que aceda ao equipamento em geral, e que alerte, de forma legível, para o facto de as superfícies destes produtos poderem estar quentes, não devendo ser tocadas quando os produtos estão em funcionamento.

A unidade pode ser instalada em qualquer posição, excepto invertida (montada sobre a parte superior), ou na posição vertical, com o fluxo de ar dirigindo-se para baixo.

As aberturas de ventilação destes produtos não devem ser obstruídas. Certifique-se de que existe um espaçamento de pelo menos 50 mm entre qualquer obstrução e as aberturas de ventilação.

O chassis/cobertura da unidade está concebido de forma a proteger o pessoal especializado de perigos. Não devem ser utilizados como parte das coberturas externas de qualquer equipamento em que possam estar acessíveis aos operadores, uma vez que em condições de carga máxima, algumas peças do chassis da unidade podem atingir temperaturas superiores às consideradas seguras para o acesso do operador.

Special Instructions for medical applications

IEC/EN 60601-1 3rd Edition
ANSI/AAMI ES 60601-1
CSA C22.2 No 60601-1

These products are designed for continuous operation within an overall enclosure, and must be mounted such that access to the mains terminals is restricted.

These products are NOT suitable for use in the presence of flammable anaesthetic mixtures with air or with oxygen, or with nitrous oxide.

For IEC 60601-1, EN 60601-1, ANSI/AAMI ES 60601-1, CSA 22.2 No 60601-1 (Third Edition standards) the QM and QS range provide reinforced insulation between input and outputs (2 MOPPs) and Basic insulation (1 MOPP) between Input and Earth and from Output to Earth. Specific Non-Standard models may have 1 x MoPP isolation between module outputs separated by a blanking slot. This does not apply between a module output and the same modules signal outputs.

These products are classed as ordinary equipment and are not protected against the ingress of water (IPX0).
Reference should be made to local regulations concerning the disposal of these products at the end of their useful life.

Where any part of this product is made accessible to the operator in the end use equipment, the operator must not touch this part and the patient at the same time.

WARNING: No modification of this product is allowed.

Special instructions:

Whilst all individual outputs are classed as SELV, ES1 or ES2 outputs in accordance with the standards IEC/EN/UL/CSA60950-1 or IEC/EN/UL/CSA 62368-1, seriesed combinations of these outputs may exceed these values and become Non-SELV, ES2 or ES3 output voltages. Refer to Output Limitations for further details.

In addition, for IEC/EN/UL/CSA 60601-1 approved products. Series connected outputs with an output voltage between 60Vdc and up to 160Vdc may increase the working voltages across safety barriers. This may reduce one level of protection (1 MOPP) between primary and secondary circuits.

For IEC/EN/UL/CSA 60950-1 or IEC/EN/UL/CSA 62368-1 approved products, safety barriers are maintained with series connected outputs up to 160Vdc.

Environmental Specifications:

Description	Operation	Storage
Use	Indoor	-
Temperature	0°C - +70°C (derating at 2.5%/°C above 50°C)	-40°C - +70°C
Humidity	5 - 95% RH, non-condensing	5 - 95% RH, non-condensing
Altitude	-200m - 5000m	-200m - 5000m
Pressure	54kPa - 106kPa	54kPa - 106kPa
Orientation	Horizontal with chassis lowest, on either side or vertical with the input lowest	ALL
Material Group	IIIb	
Pollution Degree	2	
Overvoltage Category	II	
Class	I	
Weight	2.3Kg max	
IP Rating	IPX0	

Level of Insulation:

Dielectric Strength testing is carried out as follows:
Primary mains circuit to earth: 2.774kVdc
*Primary mains circuits to secondary: 6.903kVDC.
Secondary circuits to earth: 2.121kVdc
*Important Note: This test is not possible with Y capacitors fitted to the unit as damage to these capacitors may occur.

Safety Approvals:

UL60950-1 and CSA22.2 No.60950-1 - UL Recognised. C-UL for Canada.
UL62368-1 and CSA22.2 No.62368-1 - UL Recognised. C-UL for Canada.
UL/CSA 60601-1/ANSI/AAMI ES 60601-1 - UL + C -UL approval
IEC/EN60950-1, IEC/EN 62368-1 and IEC/EN60601-1 - CB Report and Certificate.
IEC/EN62368-1 – CE and UKCA mark.

CE marking when applied to any QM and/or QS product, indicates compliance with the Low Voltage Directive in that it complies with EN62368-1 and with the RoHS Directive.
UKCA marking when applied to any QM and/or QS product indicates compliance with the Electrical Equipment (Safety) Regulations 2016 in that it complies with EN62368-1 and with the Restriction of the Use of Certain Hazardous Substances in Electrical and Electronic Equipment Regulations 2012

Fusing: Internal fuses (F1): Dual fuses in the L and N line or single fuse in the live line, F16AH, 250V, 5x20mm.

Symbols:

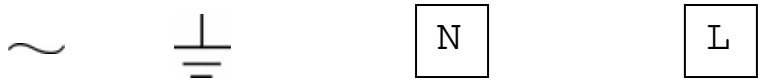

AC **EARTH** **N – Neutral** **L – Live**

AC/DC **Positive** **Negative**

If the earth terminal of the QM or QS PSU is connected to the main incoming earth conductor of the end equipment, the installer must cover the earth symbol with a label bearing the earth symbol of IEC60417-5019.

Note: All output voltages/variants may not be available as standard units, refer to datasheet for standard product range. These (and other variants) may be available as non-standard or custom units, please contact our sales team for details.

Nomenclature:

QM models as described below:
Unit Configuration Code:

QMshabcdefgklm for modular configurations
Where:

s	=	5 for QM5 models
h	=	Hold Up Option: Blank for none fitted H for Extended Hold Up
a	=	Cooling: C for Customer air (not applicable to QM5 IEC Models) F for Variable speed, forward air fan. R for Variable speed, reverse air fan.
b	=	Input connector: S for screw F for faston I for IEC connector
c	=	Input fuse: D for dual AC fuses E for single AC fuse in the live line F for dual AC/DC fuses G for single AC/DC fuse in the +ve input line
d	=	Leakage option: * See Leakage Limits to calculate unit leakage current S for 3.5mA (60950-1 & 62368-1 only) L for 300µA R for 150µA T for 60 µA
e	=	Primary option: Blank for none fitted E for global enable T for global inhibit P for PMBus
f	=	Standby supply: Blank for none fitted 5 for 5V/2A (Primary option P only) 5H for 5V/2A (Primary option E or T only) 5L for 5V/0.25A (Primary option E or T only) 12 for 12V/1A (Primary option P only) 12H for 12V/1A (Primary option E or T only)
g	=	Blank if Primary option P not fitted
		H for Input Power Present
		C for Control Pin Active High
		D for Control Pin Active Low
		F for PMBus™ and Control Pin Active High
		G for PMBus™ and Control Pin Active Low

May be followed by:

Single output modules

vMcde

Where:

v	=	Output voltage
M	=	Module name: SA, SB or SC
c	=	S for screw terminal output, F for faston
d	=	See letter from Module Signal Option Table
e	=	C for Industrial Leakage (60950 & 62368 only), omit for standard leakage

Optionally followed by 'Dxxx' where xxx is the number of mV of droop. Droop option available by Non-Standard request only.

Dual output modules

v1/v2DHcde

Where:

v1	=	CH1 output voltage
v2	=	CH2 output voltage
DH	=	Module name: DH
c	=	S for screw terminal output, F for faston
d	=	See letter from Module Signal Option Table
e	=	C for Industrial Leakage (60950& 62368 only), omit for standard leakage

v1/v2DMcde

Where:

v1	=	CH1 output voltage
v2	=	CH2 output voltage
DM	=	Module name: DM
c	=	S for screw terminal output, F for faston
d	=	See letter from Module Signal Option Table
e	=	C for Industrial Leakage (60950 & 62368 only), omit for standard leakage

Blanking plates

B/S

Where:

B/S	=	Blanking plate

Parallel combinations

vZxcde

Where:

v	=	Output voltage
Z	=	Paralleled output module comprising SB or SC modules
x	=	Number of slots (See Parallel and Series combinations Table below)
c	=	S for screw terminal output, F for faston
d	=	See letter from Module Signal Option Table
e	=	C for Industrial Leakage (60950 & 62368 only), omit for standard leakage

Series combinations

vYxcde

Where:

v	=	Output voltage
Y	=	Series output module comprising SB, SC or DH modules
x	=	Number of slots. (See Parallel and Series combinations Table below)
c	=	S for screw terminal output, F for faston
d	=	See letter from Module Signal Option Table
e	=	C for Industrial Leakage (60950 & 62368 only), omit for standard leakage

Series connected parallel modules

vHxcde

Where:

v	=	Output voltage
H	=	Series connected parallel SB or SC modules
x	=	Number of slots. (See Parallel and Series combinations Table below)
c	=	S for screw terminal output, F for faston
d	=	See letter from Module Signal Option Table
e	=	C for Industrial Leakage (60950 & 62368 only), omit for standard leakage

Combined DM modules – Series channel 1 only.

vMxcde

Where:

v	=	Output voltage
M	=	Series Channel 1 output comprising DM modules.
x	=	Number of slots. (See Parallel and Series combinations Table below)
c	=	S for screw terminal output, F for faston
d	=	See letter from Module Signal Option Table
e	=	C for Industrial Leakage (60950 & 62368 only), omit for standard leakage

klm

Where:

klm	=	Blank for standard output settings, may be three numbers from 0 to 9 (Preceded by -) which denotes various output voltage/current settings within the specified ranges of each output for a particular unit. (May define non-safety related parameters/features, e.g reduced primary current limit, reduced OVP)

Letter	Voltage adjustment pot	Module/output inhibit	Module/output good	Remote sense
Blank	**Yes**	**Yes**	**Yes**	**Yes**
N	**Yes**	**No**	**No**	**No**
L	**No**	**No**	**No**	**No**
R	**No**	**No**	**No**	**Yes**
B	**No**	**No**	**Yes**	**No**
D	**No**	**No**	**Yes**	**Yes**
F	**No**	**Yes**	**No**	**No**
G	**No**	**Yes**	**No**	**Yes**
H	**No**	**Yes**	**Yes**	**No**
J	**No**	**Yes**	**Yes**	**Yes**
K	**Yes**	**No**	**No**	**Yes**
M	**Yes**	**No**	**Yes**	**No**
P	**Yes**	**No**	**Yes**	**Yes**

Q	**Yes**	**Yes**	**No**	**No**
S	**Yes**	**Yes**	**No**	**Yes**
T	**Yes**	**Yes**	**Yes**	**No**

QS models as described below:
Unit Configuration Code:

QS[Number of available slots][Hold Up Option]-[Power]-[Voltage][Output Terminal][Standby/Signals][Unit Options]-[non safety related]

Number of available slots = 5

Hold Up Option = Blank for none fitted, H for Extended Hold Up

Power (max) = 550, 600, 1080 or 1200 from QS Output Parameters table below

Voltage = Output Voltage from the Vout range in the QS Output Parameters table below

Output Terminal = Blank for Screw terminal, F for Faston terminal

Standby/Signals = Blank or –E5H, -E5L, -T5H, -T5L, -E12H, -T12H, -P5H or -P12H
Where: E = Enable, T = Inhibit and P = PMBus
5H is 5V/2A, 5L is 5V/0.25A and 12H is 12V/1A
Followed by: (P option only)
H for Input Power Present
C for Control Pin Active High
D for Control Pin Active Low
F for PMBus™ and Control Pin Active High
G for PMBus™ and Control Pin Active Low

Unit Options = Blank for defaults or all of -[cooling][input connector][input fuse][leakage option]

Where [cooling] = F for Variable speed, forward air fan (default), R for Variable speed, reverse air fan

[Input Connector] = S for screw (default), F for Faston, I for IEC

[Input Fuse] = D for dual AC fuses (default), E for single AC fuse in the live line
F for dual AC/DC fuses, G for single AC/DC fuse in the +ve line

[Leakage Option] = S for 3.5mA (60950 & 62368 Only), L for 300 µA (default), R for 150 µA, T for 60 µA

[Non-safety related] = optional '-' followed by any number of characters indicating non-safety related model differences.

QS Output Parameters

Model	Note	Power (max)	Vout (range)	Current (max)	Hazardous Energy	Modules used
QS5	6	550	5-5.3V	110A	Yes	1 x ZF Module
-	-	600	12-13.2V	50A	Yes	1 x SC Module
-	-	600	24-26.4V	25A	Yes	1 x SC Module
-	-	600	30-33V	20A	Yes	1 x YC Module
-	-	600	48-52.8V	12.5A	Yes	1 x SC Module
-	-	600	56-61.6V	10.7A	Yes	1 x YC Module
-	-	600	96-105.6V	6.25A	Yes	1 x YC Module
-	-	1080	12-12.8V	90A	Yes	1 x ZF Module
-	-	1200	24-26.4V	50A	Yes	1 x YF Module
-	-	1200	48-52.8V	25A	Yes	1 x YF Module

Parallel and Series combinations Table

Series connection number of slots.

Qty of modules	SB		SC		DH	
	Name	Slots	Name	Slots	Name	Slots
1	*SB*	1	*SC*	2	*YB*	1
2	*YC*	2	*YF*	4	YP	2
3	YD	3	-	-	YQ	3
4	YG	4	-	-	YR	4
5	YH	5	-	-	YS	5

Limitations of use:

1. Output voltage is the combined modules voltage connected in series
2. Module limitations apply to modules connected in series

Series connection of parallel connected modules

Module	Qty	Slots	Name
ZC	2	4	HC

Limitations of use:

1. Output voltage is the combined modules voltage connected in series/parallel
2. Module limitations apply to modules connected in series/parallel

DH outputs in series but split to create extra outputs.

Qty of modules	Split after output x (first output is 1)	Name
2	1	CB
2	3	CD
3	1	FB
3	3	FD
3	5	FG
4	1	GB
4	3	GD
4	5	GG
4	7	GJ
5	1	JB
5	3	JD
5	5	JG
5	7	JJ
5	9	JL

Parallel connection number of slots

	Number of modules in parallel		
slots	SB	SC	Name
2	2	0	*ZC*
3	1	1	*ZD*
4	0	2	*ZF*
3	3	0	ZT
4	4	0	ZV

See ratings in Module output ratings table below

Combined DM modules – series connected Channel 1 only.

Number of		Nomenclature
modules	outputs	
2	3	v1/v2/v3MC
3	4	v1/v2/v3/v4MD
4	5	v1/v2/v3/v4/v5MF
5	6	v1/v2/v3/v4/v5/v6MG

Input Parameters:

	Input parameters	
Standard	60601-1 3rd Edition	60950-1 & 62368-1
Nominal input voltage	100-240Vac 115-240Vac*** 200-240Vac* 144-318Vdc 239-318Vdc*	100-240Vac 115-240Vac*** 200-240Vac* 144-318Vdc 239-318Vdc*
Input voltage range	85-264Vac** 103.5-264Vac*** (180-264Vac)* 130-350Vdc 215-350Vdc*	85-264Vac** 103.5-264Vac*** (180-264Vac)* 130-350Vdc 215-350Vdc*
Input frequency range	47-63 dc	47-440Hz dc
Maximum input current	11Arms or 7Adc 11Arms*** 9Arms or 7Adc*	11Arms or 7Adc 11Arms*** 9Arms or 7Adc*

* Input for 800W or 1200W models.
**Output power is derated to 650W between 85-89.9Vac.
***Input for 750W models

Input Connections:

3 way Terminal block: 8.25mm spacing between screw head centres. M3 screws, 0.5Nm torque, 20A/300V MAX**.**
Faston: 6.3 x 0.8mm, Tin plated brass, rated 22A.
IEC Connector: 10A/250Vac.

QM5 Output Parameters

Module output ratings table.

Module	Note	Slots	Output Channel	Vout Nom (V)	Adjustment range	Output current (A)	Output power (W)	Hazardous energy
DM	5,8	1	CH1	12	11.9 to 16.1	10	120	Yes
DM	2	1	CH1	17	16 to 21.6	7.5	120	Yes
DM	4,5	1	CH1	24	20.8 to 28.2	5	120	Yes
DM	–	1	CH2	0	0	0	0	No
DM	–	1	CH2	3.3	2.8 to 3.8	10	33	No
DM	–	1	CH2	5	4.25 to 5.75	10	50	No
DM	–	1	CH2	8	7 to 9.5	10	95	No
DM	3,8	1	CH2	14	11.9 to 16.1	8.3	100	No
DM	3	1	CH2	24	23.5 to 24.5	4.16	100	No
DH	1	1	CH1	12	10.2 to 13.8	10	120	Yes
DH	1	1	CH1	15	12.75 to 17.25	8	120	Yes
DH	1	1	CH1	24	20.4 to 27.6	5	120	Yes
DH	1	1	CH1	27	23 to 31	4.4	120	Yes
DH	–	1	CH2	0	0	0	0	No
DH	2	1	CH2	12	10.2 to 13.8	10	120	Yes
DH	2	1	CH2	15	12.75 to 17.25	8	120	Yes
DH	2	1	CH2	24	20.4 to 27.6	5	120	Yes
DH	2	1	CH2	27	23 to 31	4.4	120	Yes
SA	–	1	CH1	5	5 to 5.5	15	75	No
SA	–	1	CH1	12	12 to 13.2	12.5	150	No
SA	–	1	CH1	15	15 to 16.5	10	150	No
SA	–	1	CH1	24	24 to 26.4	6.25	150	No
SB	–	1	CH1	3.3	3.3 to 3.63	37	122	No
SB	7	1	CH1	3.4	3.2 to 3.6	37	126	No
SB	–	1	CH1	5	5 to 5.5	30	150	No
SB	–	1	CH1	8.1	8 to 8.8	25	200	Yes
SB	–	1	CH1	12	12 to 13.2	25	300	Yes
SB	–	1	CH1	15	15 to 16.5	20	300	Yes
SB	–	1	CH1	18	18 to 19.8	16.7	300	Yes
SB	–	1	CH1	20	20 to 22	15	300	Yes
SB	–	1	CH1	24	24 to 26.4	12.5	300	Yes
SB	–	1	CH1	28	28 to 30.8	10.7	300	Yes
SB	–	1	CH1	48	48 to 52.8	6.25	300	Yes
SC	6	2	CH1	5	5 to 5.5	60	300	Yes
SC	–	2	CH1	12	12 to 13.2	50	600	Yes
SC	–	2	CH1	17	17 to 18.7	35.29	600	Yes
SC	–	2	CH1	24	24 to 26.4	25	600	Yes
SC	–	2	CH1	30	30 to 33	20	600	Yes
SC	–	2	CH1	36	36 to 39.6	16.7	600	Yes

SC	–	2	CH1	48	48 to 52.8	12.5	600	Yes
ZC	–	2	CH1	15	15 to 16	36	540	Yes
ZC	–	2	CH1	18	18 to 19.2	30	540	Yes
ZC	–	2	CH1	28	28 to 30	19.3	540	Yes
ZD	–	3	CH1	5	5 to 5.3	80	400	Yes
ZD	–	3	CH1	12	12 to 12.8	65	780	Yes
ZD	–	3	CH1	24	24 to 25.6	30	720	Yes
ZD	–	3	CH1	48	48 to 51.2	15	720	Yes
ZF	6	4	CH1	5	5 to 5.3	110	550	Yes
ZF	–	4	CH1	12	12 to 12.8	90	1080	Yes
ZF	9	4	CH1	17	17 to 18.19	63.5	1080	Yes
ZF	–	4	CH1	36	36 to 38.4	29	1044	Yes
ZT	–	3	CH1	15	15 to 16	50	750	Yes
ZV	–	4	CH1	15	15 to 16	66.4	996	Yes

Note 1: CH1 limited to 80W when CH2 at 120W. Maximum of 200W across module.
Note 2: CH2 Limited to 80W when CH1 at 120W. Maximum of 200W across module.
Note 3: CH2 has a maximum of 100W. Maximum of 200W across the module.
Note 4: CH1 (24V) has a reduced adjustment range when CH2 is 24V. Reduced adjustment range is 21.6V to 28.8V.
Note 5: CH1 limited to 100W when CH2 at 100W. Maximum of 200W across module. Achievable if the ambient temperature is reduced to 40°C.
Note 6: Please see Further De-ratings Table below
Note 7: KQM5001V-x model only
Note 8: N/A
Note 9: 67A for 10 seconds

Further De-ratings Table

Converter	Module	40°C Ambient	45°C Ambient	50°C Ambient	Global option fitted	Comments
QM5	SC	60A	-	50A	N/A	-
-	YF	60A	-	50A	N/A	-
-	ZF	110A	-	90A	N/A	-

Cooling Options

Cooling option	Input voltage (Vnom)	Output power (W)	Ambient (°C)
F (Forward air, variable speed)	100-240** 115-240 200-240*** 200-240***	700 750 800 1200	50 50 50 50
C (Customer air)*	100-240** 115-240 200-240*** 200-240***	700 750 800 1200	50 50 50 50
R (Reverse air, variable speed)	100-240** 200-240*** 200-240***	700 800 1200	35 30 30

*Not applicable to IEC version
**144-318Vdc nom
***239-318Vdc nom

Component temperatures, for customer air cooled models, must be monitored in the end use application as described in the “Cooling for Unit Temperature Table” below.

The following method must be used for determining the safe operation of PSUs.
The components listed in the following table must not exceed the temperatures given. To determine the component temperatures the heating tests must be conducted in accordance with the requirements of the standard in question. Consideration should also be given to the requirements of other safety standards.
Test requirements include: PSU to be fitted in its end-use equipment and operated under the most adverse conditions permitted in the end-use equipment instruction manual/specification and which will result in the highest temperatures in the PSU. To determine the most adverse conditions consideration should be given to the end use equipment maximum operating ambient, the PSU loading and input voltage, ventilation, end use equipment orientation, the position of doors & covers, etc. Temperatures should be monitored using type K fine wire thermocouples (secured with cyanoacrylate adhesive or similar) placed on the hottest part of the component (out of any direct airflow) and the equipment should be run until all temperatures have stabilised.

Cooling for Unit Temperature Table:

Circuit Ref.	Description	Max. Temperature (°C)
PFC	-	-
QM5/QS5	-	-
L2	Common Mode Choke	115 (140)
L4	Boost choke	125
C2	Electrolytic Capacitors	71 (105)
C10	Electrolytic Capacitors	71 (105)
C7	Electrolytic Capacitors	64 (105)
C8	Electrolytic Capacitors	60 (105)
C11	Electrolytic Capacitors	77 (105)
C3, C14,	X Capacitor	100
C12	Y Capacitors	105
TX1	Fly back Transformer	120
D1	Diode bridge	118 (130)
D3	PFC diode	130
U4	Opto-coupler	100
U3	Voltage regulator	120 (130)
Q2	Boost FETS	130
Low Power Options	-	-
U6	Opto-couplers	100
High Power Options	-	-
C6	Electrolytic Capacitors	73 (105)
XU3	Opto-couplers	100
TX1	Transformer Class F	130
‘Q’ PMbus		
XU3	Opto-couplers	100
DM/DH Modules	-	-
C206	Y Capacitors	105
C207	Electrolytic Capacitors	84 (105)
U8	Opto-couplers	100
Q1	Primary FET	120 (130)
D201	Output diode	124 (130)
TX1	Transformer Class B	110
SC module Modules	-	-
C206	Electrolytic Capacitors	83 (105)
C209	Y Capacitors	105
U1	Opto-couplers	100
TX1	Transformer Class B	110
TX1 (12V)	Transformer Class F	130
Q1	Primary FET	127 (130)
Q203	Secondary FET	130
SB module Modules	-	-
C206	Electrolytic Capacitors	83 (105)
C209	Y Capacitors	105
U1	Opto-couplers	100
TX1	Transformer Class B	110
Q1	Primary FET	127 (130)
Q203	Secondary FET	130

SA module Modules	**-**	**-**
C202	Electrolytic Capacitors	76 (105)
C209	Y Capacitors	105
XU206	Opto-couplers	100
TX2	Transformer Class B	110
XQ1	Primary FET	130
XU202	Secondary FET	130

Higher temperature limits (in brackets) may be used but product life may be reduced.

Leakage Limits:

S	1.24mA (60950-1 & 62368-1 only)
L	212µA
R	77µA
T	60µA

In order to calculate the leakage limits for your chosen model. Use the converter leakage current from the table above and add the leakage current from modules, filter options and standby supply from the table below.

Module/Filter/Standby	Leakage Current
Option xxL	13.1µA
Option xxH	15µA
DH Module	20.5µA
DM Module	22.3µA
SB Module	14.6µA
SC Module	13.8µA
YB Module	20.5µA
YC Module	29.2µA
YF Module	27.6µA
ZC Module	29.2µA
ZD Module	28.3µA
ZF Module	27.6µA

Output Limitations:

Adjusting output voltage beyond the stated range may cause overvoltage protection (OVP) to operate, whereby the output will latch off. To reset for normal operation simply adjust the potentiometer to reduce the output voltage to within its range and cycle the input off then on.

The 0.25V Standby supply provided with the E5H, E12H, T5H and T12H options derates by 2.4% per °C from 25°C to 50°C when the the unit is inhibited (fan not running).

60950-1: Series modules

For SB, SC and DM modules, all outputs are SELV except under the following circumstance: Outputs connected in series are non-SELV if, using the formula below, V_{Total} is found to be >60Vdc

$V_{Total} = (n-1) \times V_{outmax} + X$

Where n is the number of seriesed outputs
Where X is taken from the table below
Where V_{outmax} is taken from the table below

SC modules	Voutmax	OVP (% V_{outnom})	X
5	5.5	140	7
12	13.2	140	16.8
24	26.4	130	31.2
36	39.6	140	50.4
48	52.8	125	60

SB modules	Voutmax	OVP (% V_{outnom})	X
3.3	3.63	140	4.62
5	5.5	140	7
12	13.2	140	16.8
15	16.5	140	21
18	19.8	140	25.2
24	26.4	130	31.2
28	30.8	140	39.2
48	52.8	125	60

DM modules	Voutmax	OVP (% V_{outnom})	X
12	16.1	135	21.7
24	28.8	135	38.8

For DH modules, all outputs are SELV except under the following circumstance: Outputs connected in series are non-SELV if, using the formula below, V_{Total} is found to be >60Vdc

$$V_{Total} = (2\times V_{outmax} \times 1.3) + (n-2) \times V_{outmax}$$

Where n is the number of outputs connected in series

DH modules	Voutmax	OVP (% V_{outnom})
12	13.8	130
15	17.25	130
24	27.6	130
27	31	130

If the total voltage of outputs connected in series exceeds the 60Vdc SELV limit then all outputs must be considered non-SELV.

Non-SELV outputs are hazardous and must not be made user accessible. Consideration must be given to service engineers making inadvertent contact with the output terminals in the end equipment.

62368-1: Series modules

Refer to the table below for series module Energy Source Classification

Module Code	Slots	Number of Outputs	Module Description	ES1 (<42.4Vpk, 60Vdc) (Module nominal voltage used)	ES2 (Anything above ES1 but below 70.7Vpk, 120Vdc) (Module nominal voltage used)	ES3 (anything above ES2) (Module nominal voltage used)
SB	1	1	Single module	3.3, 3.4, 5, 8.1, 12, 15, 18, 20, 24, 28	48	-
YC	2	1	Modules connected in series	6.6, 6.8, 10, 16.2, 24, 30, 36	40, 48, 56	96
YD	3	1	Modules connected in series	9.9, 10.2, 15, 24.3, 36	45, 54, 60	72, 84, 144
YG	4	1	Modules connected in series	13.2, 13.6, 20, 32.4	48, 60	72, 80, 96, 112, 192
YH	5	1	Modules connected in series	16.5, 17, 25	40.5, 60	75, 90, 100, 120. 140, 240
-	-	-	-	-	-	-
SC	2	1	Single module	5, 12, 17, 24, 30, 36	48	-
YF	4	1	Modules connected in series	10, 24, 34	48, 60	72, 96
-	-	-	-	-	-	-
DH	1	1	Twin module	Ch 1: 12, 15, 24, 27. Ch 2: 12, 15, 24, 27	-	-
YB	1	1	Module connected in series	Ch 1: 24, 30	48, 54	-
YP	2	1	Modules connected in series	-	48, 60,	96, 108
YQ	3	1	Modules connected in series	-	-	All YQ modules are ES3
YR	4	1	Modules connected in series	-	-	All YR modules are ES3
YS	5	1	Modules connected in series	-	-	All YS modules are ES3
-	-	-	-	-	-	-
DM	1	2	Twin module	Ch 1: 12, 17, 24. Ch 2: 3.3, 5, 8, 14, 24	-	-
MC	2	3	Modules connected in series (CH1)	24/x/x, 34/x/x where x can be 3.3, 5, 8, 14, or 24V	48/x/x where x can be 3.3, 5, 8, 14, or 24V	-
MD	3	4	Modules connected in series	-	51/x/x/x where x can be 3.3, 5, 8, 14, or 24V	72/x/x/x where x can be 3.3, 5, 8, 14, or 24V

MF	4	5	Modules connected in series	-	48/x/x/x/x where x can be 3.3, 5, 8, 14, or 24V	68/x/x/x/x 96/x/x/x/x where x can be 3.3, 5, 8, 14, or 24V
MG	5	6	Modules connected in series	-	-	All MG modules are ES3
-	-	-	-	-	-	-
CB	**2**	2	Twin module, split after 1st output	12/36, 15/36, 24/36, 27/36	12/45, 15/45, 24/45, 27/45	12/72, 15/72, 24/72, 27/72, 12/81, 15/81, 24/81, 27/81
CD	**2**	2	Modules connected in series, split after 3rd output	36/12, 36/15, 36/24, 36/27	45/12, 45/15, 45/24, 45/27	72/12, 72/15, 72/24, 72/27, 81/12, 81/15, 81/24, 81/27
FB	**3**	2	Modules connected in series, split after 1st output	-	12/60, 15/60, 24/60, 27/60	12/60, 15/60, 24/60, 27/60, 12/75, 15/75, 24/75, 27/75, 12/120, 15/120, 24/120, 27/120, 12/135, 15/135, 24/135, 27/135
FD	**3**	2	Modules connected in series, split after 3rd output	36/36	36/45, 45/36, 45/45	36/72, 36/81, 45/72, 45/81, 72/36, 72/45, 72/72, 72/81, 81/36, 81/45, 81/72, 81/81,
FG	**3**	2	Modules connected in series, split after 5th output	-	60/12, 60/15, 60/24, 60/27	75/12, 75/15, 75/24, 75/27, 120/12, 120/15, 120/24, 120/27, 135/12, 135/15, 135/24, 135/27
GB	**4**	2	Modules connected in series, split after 1st output	-	-	All GB modules are ES3
GD	**4**	2	Modules connected in series, split after 3rd output	-	36/60, 45/60,	36/75, 36/120, 36/135, 45/75, 45/120, 45/135, 72/60, 72/75, 72/120, 72/135, 81/60, 81/72, 81/120, 81/135
GG	**4**	2	Modules connected in series, split after 5th output	-	60/36, 60/45	60/72, 60/81 75/36, 75/45, 75/72, 75/81 120/36, 120/45, 120/72, 120/81 135/36, 135/45, 135/72, 135/81
GJ	**4**	2	Modules connected in series, split after 7th output	-	-	All GJ modules are ES3
JB	**5**	2	Modules connected in series , split after 1st output	-	-	All JB modules are ES3

JD	**5**	2	Modules connected in series, split after 3rd output	-	-	All JD modules are ES3
JG	**5**	2	Modules connected in series, split after 5th output	-	60/60	60/75, 60/120, 60/135, 75/60, 75/75, 75/120, 75/135, 120/60, 120/75, 120/120, 120/135, 135/60, 135/75, 135/120, 135/135
JJ	**5**	2	Modules connected in series, split after 7th output	-	-	All JJ modules are ES3
JL	**5**	2	Modules connected in series, split after 9th output	-	-	All JL modules are ES3

ES2 and ES3 outputs are hazardous and must not be made user accessible. Consideration must be given to service engineers making inadvertent contact with the output terminals in the end equipment.

Output Connections:

Module/Option	Connector	Housing	Crimp pin	Output screw size and torque	Fast-on terminals
Global Option.	J1 Option connector	(Molex) 51110-1060	(Molex) 50394-8051	-	-
PMbus	J5 Option connector	(Molex) 51110-1260	(Molex) 50394-8051	-	-
DM module	J206 Option connector	(Molex) 51110-1260	(Molex) 50394-8051	-	-
DM module	J202, J203, J204, J205 Power connectors	-	-	M3 0.5 – 0.6Nm	Four 6.35mm fast-ons. Each rated 18 Amps
DH module	J206 Option connector	(Molex) 51110-1060	(Molex) 50394-8051	-	-
DH module	J202, J203, J204, J205 Power connectors	-	-	M3 0.5 – 0.6Nm	Four 6.35mm fast-ons. Each rated 18 Amps
SB module	J204 Option connector	(Molex) 51110-1060	(Molex) 50394-8051	-	-
SB module	J202, J203 Power connectors	-	-	M5 2.4 -2.6Nm	Four 9.5mm fast-ons. Each rated 32 Amps
SC module	J204 Option connector	(Molex) 51110-1060	(Molex) 50394-8051	-	-
SC module	J202, J203 Power connectors	-	-	M5 2.4 -2.6Nm	Four 9.5mm fast-ons. Each rated 32Amps
SA module	J202, J203 Power connectors	-	-	M5 2.4 -2.6Nm	Four 9.5mm fast-ons. Each rated 32Amps
SA module	J204 Option connector	(Molex) 51110-1060	(Molex) 50394-8051	-	-

Mechanical Outline Drawings:

Customer fixing points

Standard Unit

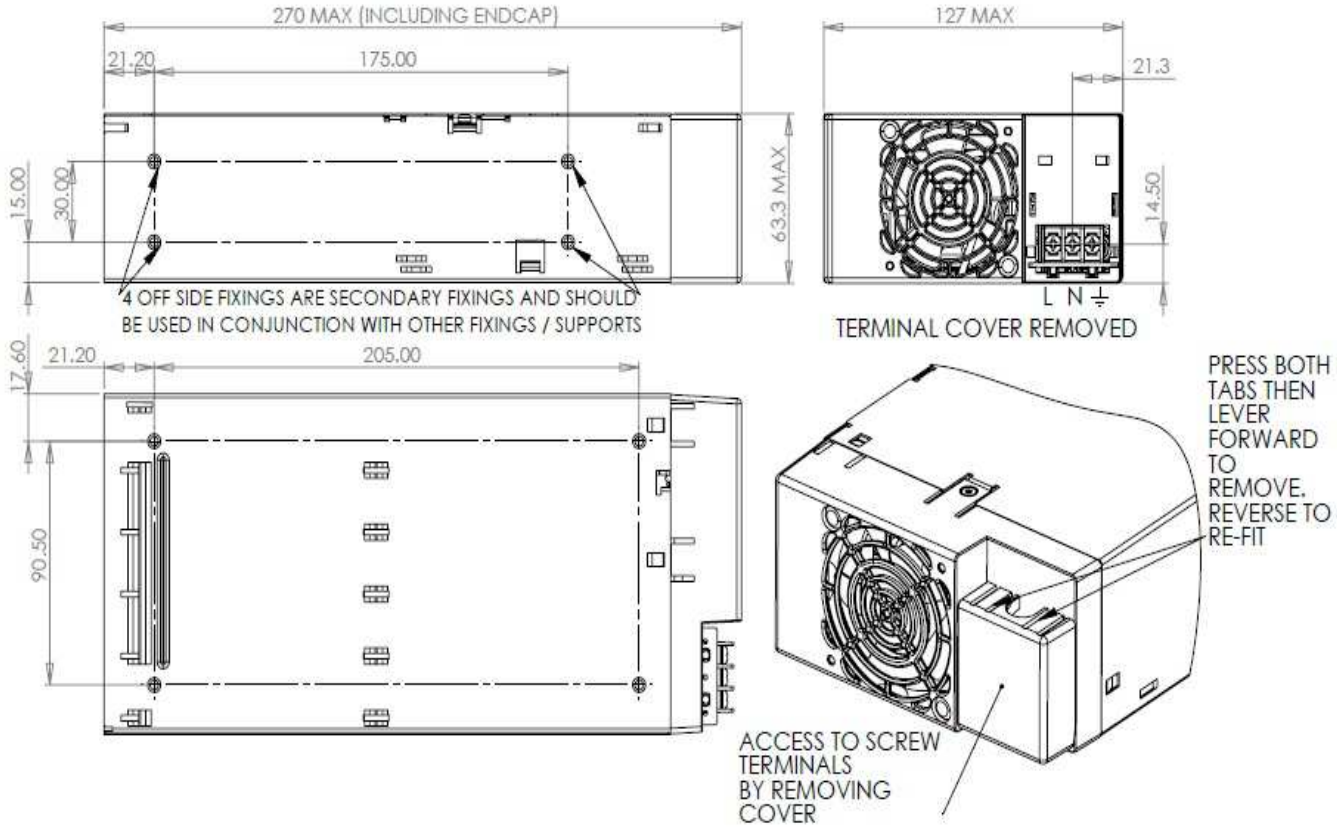

Customer Fixings.
8 holes M4.
Max thread penetration:- 4.5mm

Maximum torque 1.1 to 1.3Nm

IEC Connector

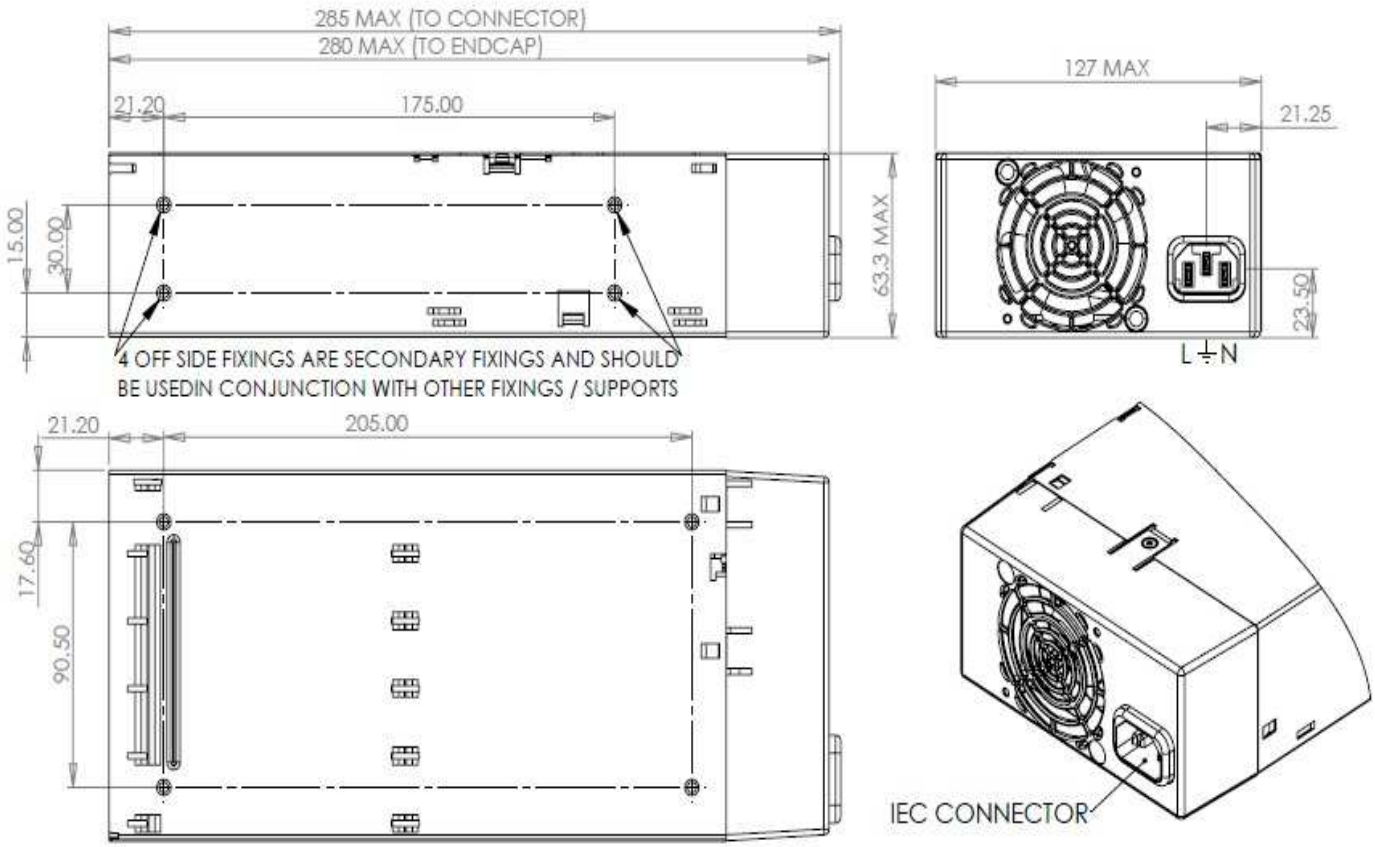

Customer Fixings.
8 holes M4.
Max thread penetration:- 4.5mm

Maximum torque 1.1 to 1.3Nm

Option Pin Outs

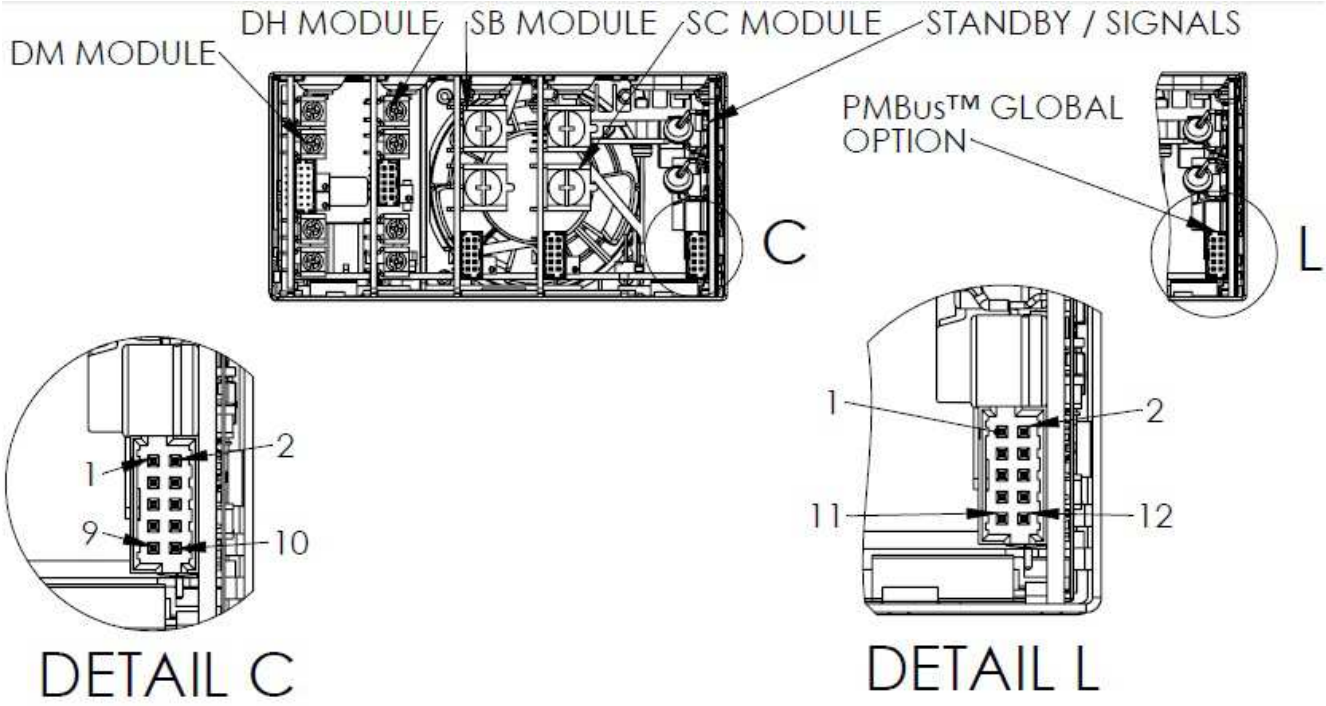

GLOBAL OPTION			
	L	H	PMBus™
Pin	OUTPUTS	OUTPUTS	OUTPUTS
1	NC	STANDBY 2 +	STANDBY 2 +
2	NC	STANDBY 2 -	STANDBY 2 -
3	STANDBY 1 +	STANDBY 1 +	N/C
4	STANDBY 1 -	STANDBY 1 -	FAN FAIL OUT
5	PSU ON / OFF +	PSU ON / OFF +	PMBus™ ADDRESS 0
6	PSU ON / OFF -	PSU ON / OFF -	PMBus™ ADDRESS 1
7	AC FAIL OUT	AC FAIL OUT	PMBus™ ADDRESS 2
8	AC FAIL RTN	AC FAIL RTN	PMBus™ ADDRESS 3
9	NC	INPUT LOGIC- 0	SCL - CLOCK
10	NC	INPUT LOGIC- 1	SDA - DATA
11	N/A	N/A	PMBus™ CONTROL LINE IN
12	N/A	N/A	GND

Secondary Option Pin Out

DM MODULE (1 SLOT, 2 OUTPUT)

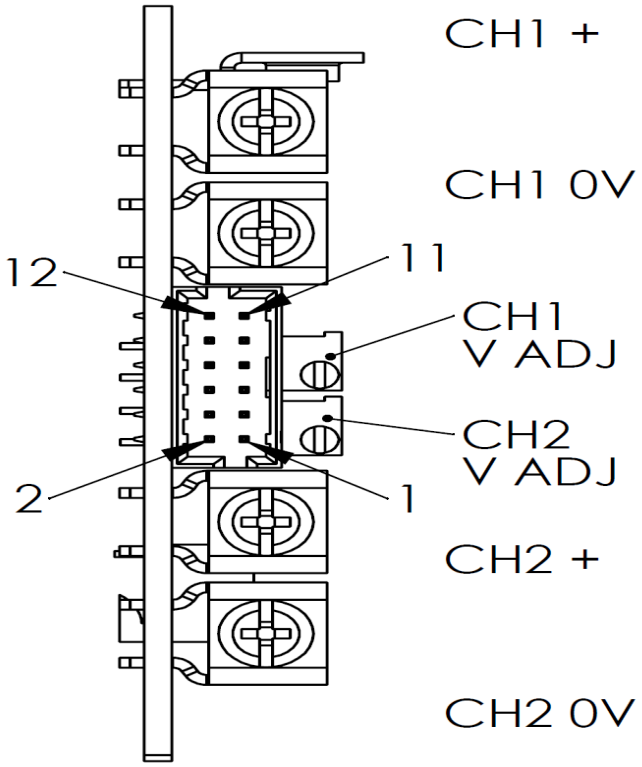

PIN	OUTPUT
1	CH2 SENSE +
2	CH2 SENSE -
3	CH2 INHIBIT ANODE
4	CH2 INHIBIT CATHODE
5	CH2 GOOD COLLECTOR
6	CH2 GOOD EMITTER
7	CH1 GOOD COLLECTOR
8	CH1 GOOD EMITTER
9	MODULE INHIBIT ANODE
10	MODULE INHIBIT CATHODE
11	CH1 SENSE +
12	CH1 SENSE -

DH MODULE (1 SLOT, 2 OUTPUT)

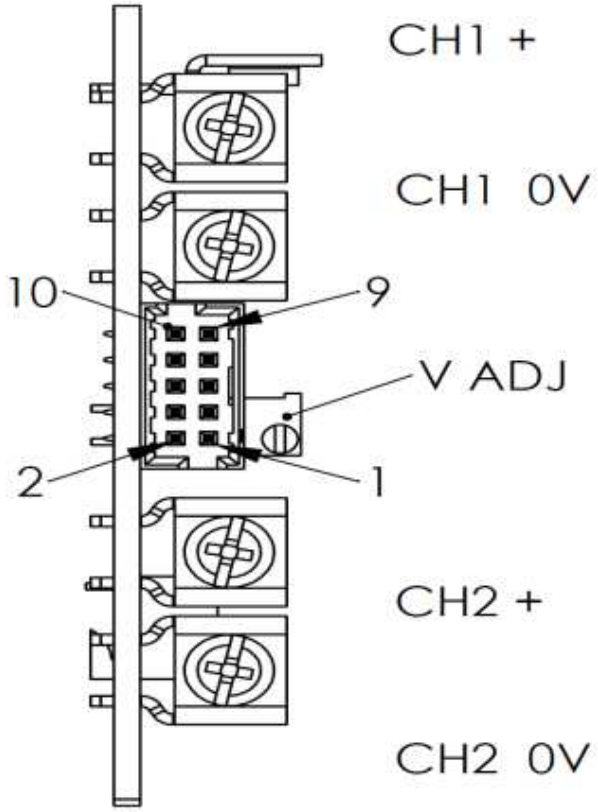

PIN	OUTPUT
1	N.C.
2	N.C.
3	MODULE GOOD COLLECTOR
4	MODULE GOOD EMITTER
5	MODULE INHIBIT ANODE
6	MODULE INHIBIT CATHODE
7	N.C.
8	N.C.
9	N.C.
10	N.C.

SB MODULE
(1 SLOT, 1 OUTPUT)

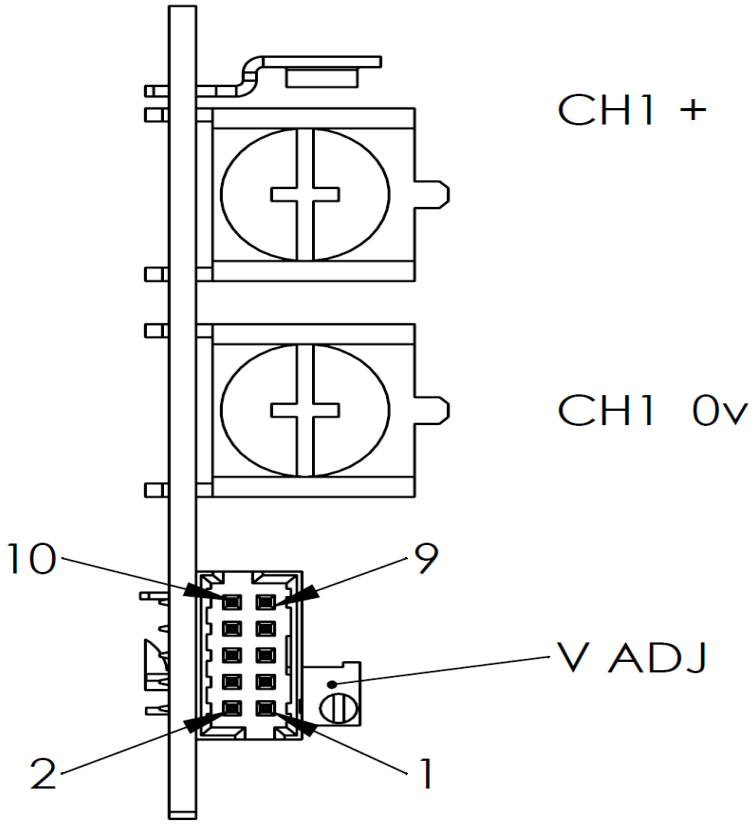

PIN	OUTPUT
1	N.C.
2	N.C.
3	MODULE GOOD COLLECTOR
4	MODULE GOOD EMITTER
5	MODULE INHIBIT ANODE
6	MODULE INHIBIT CATHODE
7	REMOTE SENSE +
8	REMOTE SENSE -
9	N.C.
10	N.C.

SC MODULE
(2 SLOT, 1 OUTPUT)

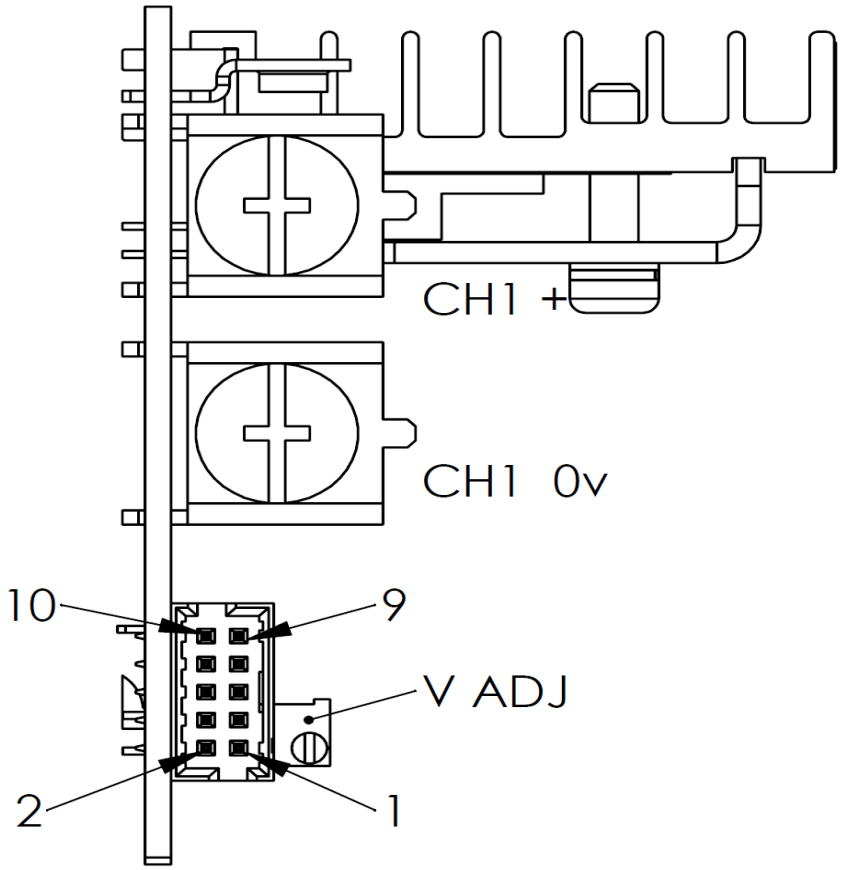

PIN	OUTPUT
1	N.C.
2	N.C.
3	MODULE GOOD COLLECTOR
4	MODULE GOOD EMITTER
5	MODULE INHIBIT ANODE
6	MODULE INHIBIT CATHODE
7	REMOTE SENSE +
8	REMOTE SENSE -
9	N.C.
10	N.C.

SA MODULE
(1 SLOT, 1 OUTPUT)

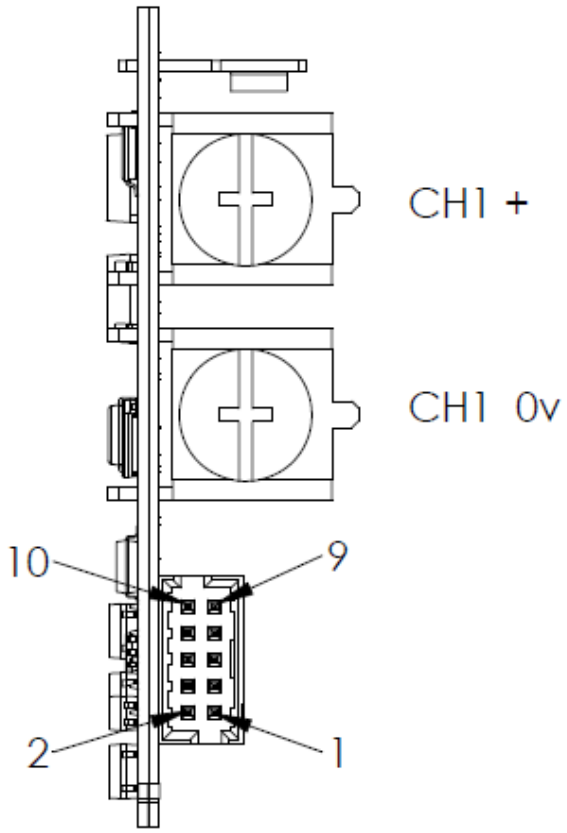

PIN	OUTPUT
1	N.C.
2	N.C.
3	N.C.
4	N.C.
5	N.C.
6	N.C.
7	REMOTE SENSE +
8	REMOTE SENSE -
9	N.C.
10	N.C.

Slot order

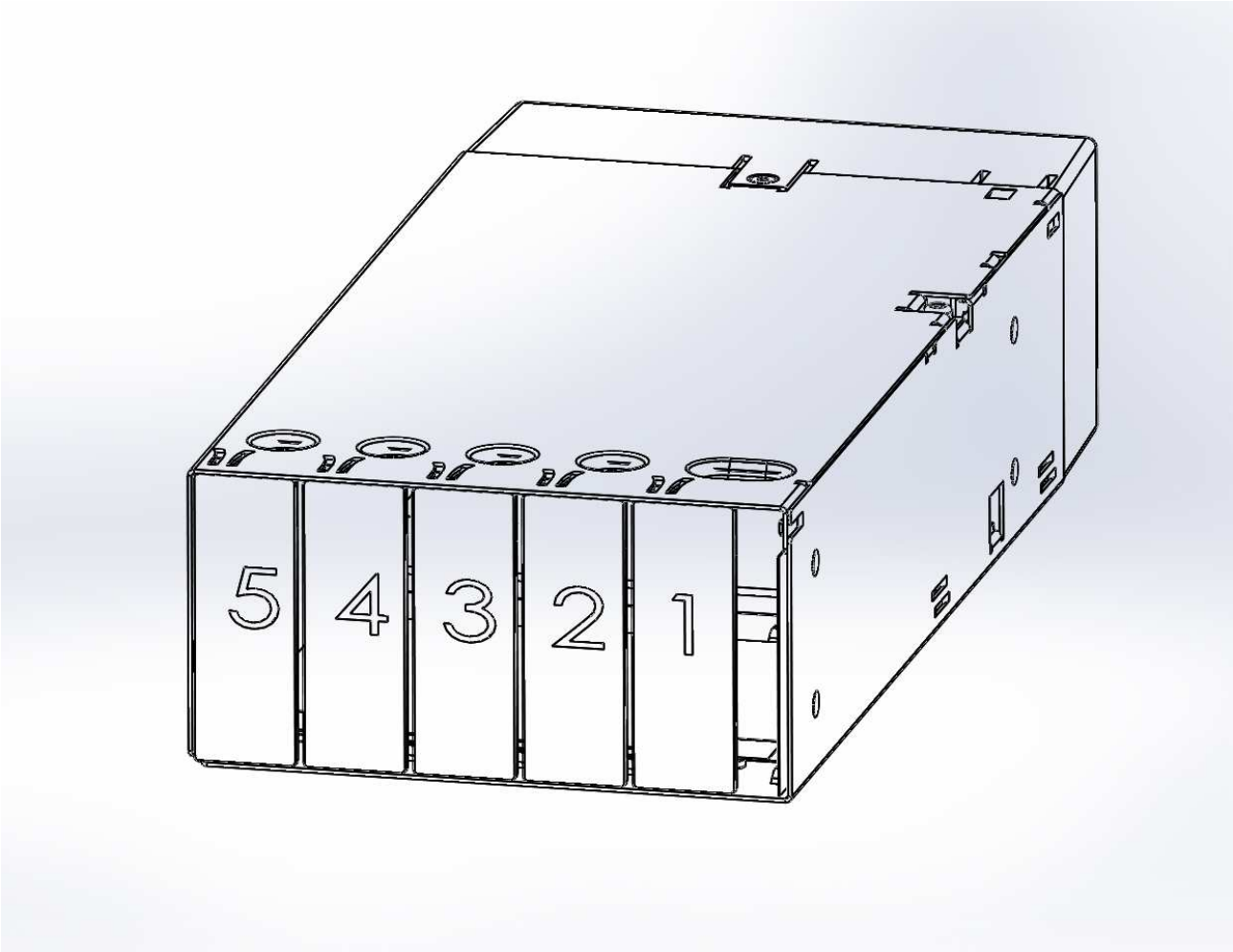

TDK·Lambda
TDK-Lambda UK Ltd
Kingsley Avenue, Ilfracombe
Devon, EX34 8ES
Telephone - Sales and Service +44 (0)1271 856666
Head Office and Works +44 (0)1271 856600
Facsimile +44 (0)1271 864894
WEBSITE: www.uk.tdk-lambda.com