i7CxxC03-EVK-S1; i7AxxC01-EVK-S1

Evaluation Kit Manual for i7x Non-Isolated DC-DC Series

Contents

1. Introduction 2
2. Ordering Information 2
3. General Features 3
4. Turn-on / Turn-off module by switch 4
5. Change Output Voltage 4
6. When use external clock (SYNC function) 4
7. Capture output ripple/noise waveform 4
8. Mechanical Outline 5
9. Schematic 6
10. PCB Layout 7
11. Parts List 9

1. Introduction

This evaluation kit has been designed to provide an easy way to characterize the product performance and its features. It is intended to aid customers and determine the product suitability for the target application. The evaluation board incorporates the required external components to demonstrate the complete product functionality. It also includes other components (e.g. test points, etc…) to facilitate a successful end user experience. Not all these external components are required if the product features are not needed. Details of the external components, schematics, and PCB layout are provided in this documentation for reference only. Final design and qualification needs to be verified at customer's end system level.

2. Ordering Information

TDK-Lambda offers a wide variety of non-isolated dc-dc power modules in the i7X series. Not every product is currently available in an evaluation kit. The table below includes description and ratings which should help in selecting the most applicable evaluation kit.

Evaluation Kit Part Number	Non-Isolated DC-DC Module *(Included and Mounted on the Evaluation Board)*					
	DC-DC Module Part Number	Type	I/P Range	O/P Range	O/P Current (max)	O/P Power (Max)
i7C08A-C03-EVK-S1	i7C4W008A120V-003-R	Buck-Boost	9 – 53 V	9.6 – 48 V	8 A	300 W
i7C12A-C03-EVK-S1	i7C4W012A050V-003-R	Buck-Boost	9 – 53 V	5.0 – 28 V	12.5 A	300 W
i7C20A-C03-EVK-S1	i7C2W020A120V-003-R	Buck-Boost	9 – 36 V	8.0 – 24 V	20 A	300 W
i7A33A-C01-EVK-S1	i7A4W033A033V-001-R	Buck	18 – 60 V	3.3 – 24 V	33 A	500 W
i7A45A-C01-EVK-S1	i7A24045A033V-001-R	Buck	18 – 32 V	3.3 – 18 V	45 A	750 W

IMPORTANT INFORMATION

- Observe proper safety and laboratory procedures when testing electronic products. This list serves as general guide only and not a substitute for common sense and best practices.
- Before applying power, double check and ensure all connections to the evaluation board interface are correct (e.g. Input source polarity connections, etc…).
- This evaluation board is not populated with an input fuse. An input fuse can be populated in pcb location F1. Check the product specifications for the input fuse ratings and the evaluation board schematics included this manual. Make sure the existing jumper connections, BB4 and BB5, are removed when adding the fuse.
- Although highly efficient, these high power density modules can dissipate significant amounts of power, especially at heavy load. Care should be taken to ensure adequate cooling is provided and the modules are operated within the thermal specifications outlined in the product data sheets. Heat sink and base plated versions of the i7X family are available for use in demanding environments.
- This evaluation kit is designed for general laboratory use. It is not intended for installation in end customer product or equipment.
- Please check the pertinent product (DC-DC Module) datasheets and specifications for complete information.

3. General Features

- Screw Terminals for secured input and output connections
- Toggle switch for Remote ON/OFF
- Test points / Scope probe hook-ups for ease of measurement
- Trim Potentiometer for adjusting the output voltage setting
- Component PCB pad provisions for: Input fuse, input inductor, additional input and output capacitance*, Output header connector for optional features and signals.

* Note the output capacitor value may need to be adjusted to meet transient response or ripple requirements of the final application. Refer to product data sheet for a range of acceptable values.

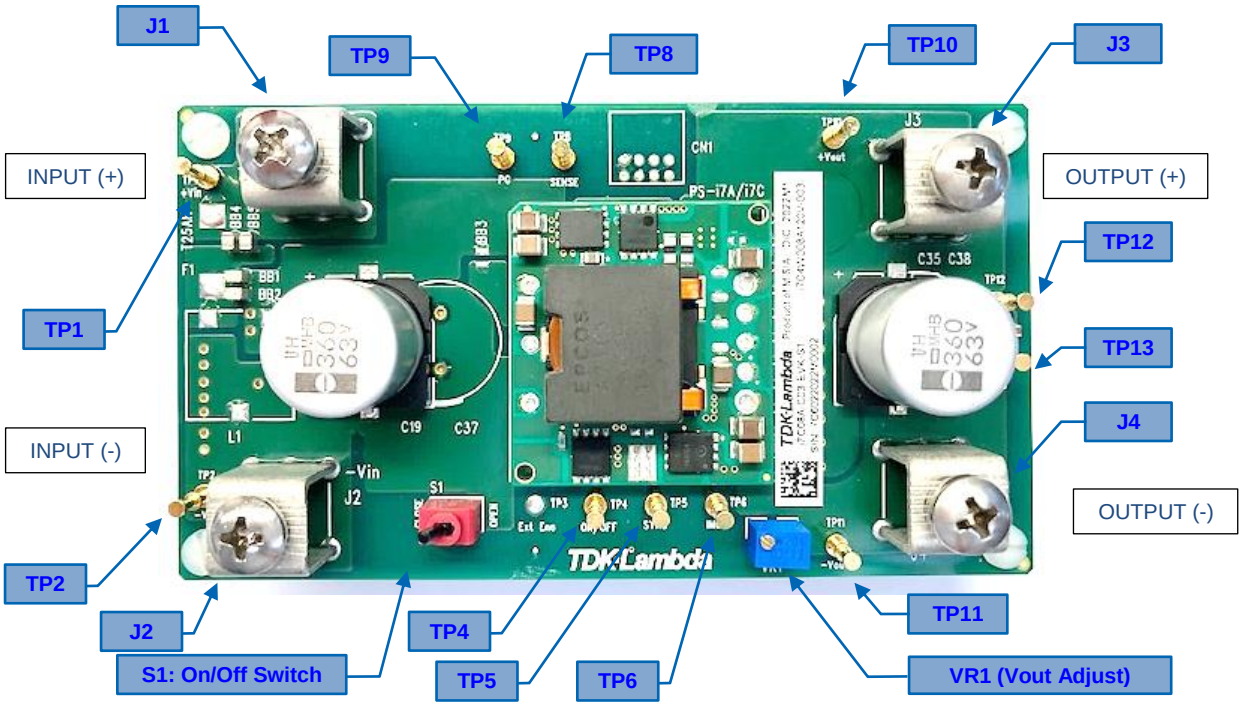

Test Point	Description	Test Point	Description
TP1	Vin (+)	TP8	SENSE +
TP2	Vin (-) / GND	TP9	PG (Power Good)
TP3	*Not Populated*	TP10	Vout (+)
TP4	ON / OFF	TP11	Vout (-) / GND
TP5	SYNC (Frequency Synchronization)	TP12	Vout (+) - for Output Ripple Measurement
TP6	I_MON (Output Current Monitor)	TP13	Vout (-) / GND – for Output Ripple Measurement

Screw Terminal	Description	Screw Terminal	Description
J1	Vin (+)	J3	Vout (+)
J2	Vin (-) / GND	J4	Vout (-) / GND

4. Turn-on / Turn-off module by switch

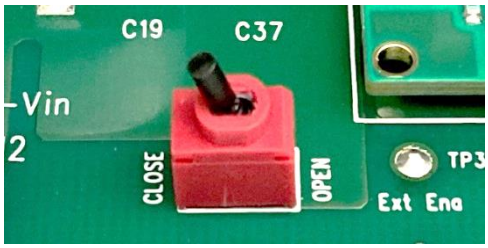

Change position of toggle switch"S1" to "CLOSE" turns-on the power supply unit.

5. Change Output Voltage

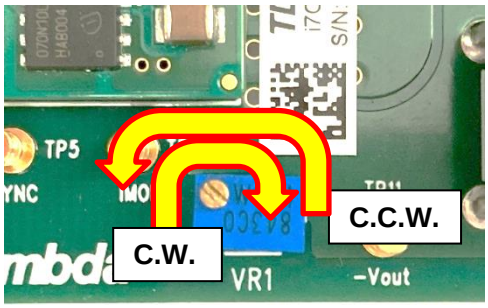

Turn screw on trimmer pot "VR1" to change the output voltage.
Turn clockwise to decrease output voltage.
Turn counter clockwise to increase output voltage.

6. When using external clock (SYNC function)

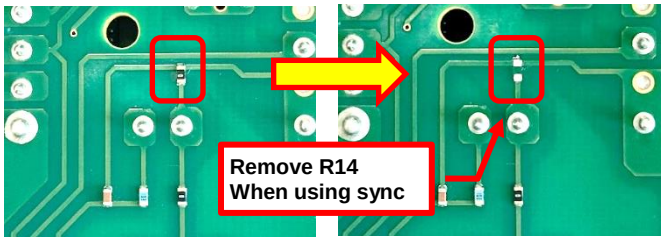

SYNC function default setting is disabled. Please remove resister "R14" on bottom side of the board to enable the SYNC function.

7. Capture output ripple/noise waveform

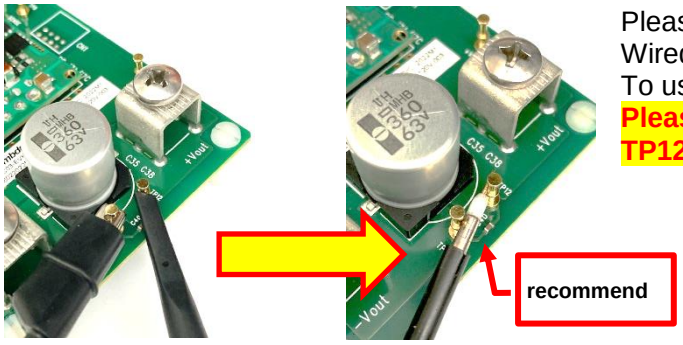

Please use TP12, TP13 to measure output ripple/spike.
Wired GND clip may pick up higher spike noise.
To use bare probe minimize spike noise.
Please pay attention for connect right polarity.
TP12 is Vout(+) / TP13 is GND.

8. Mechanical Outline

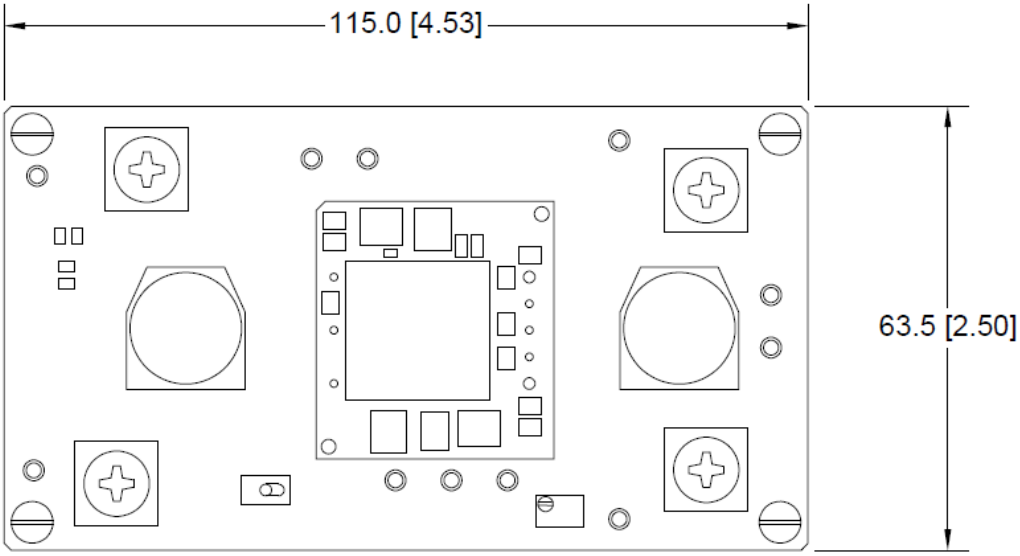

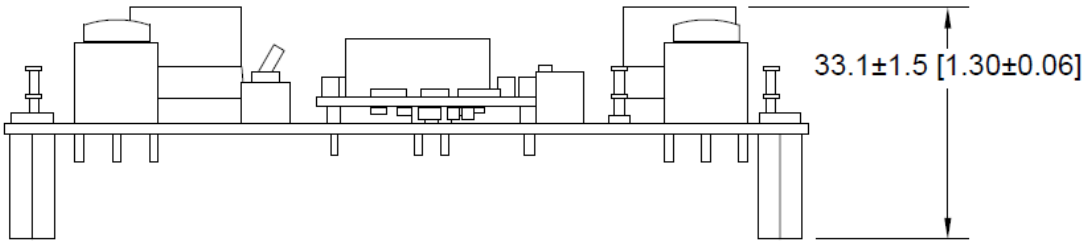

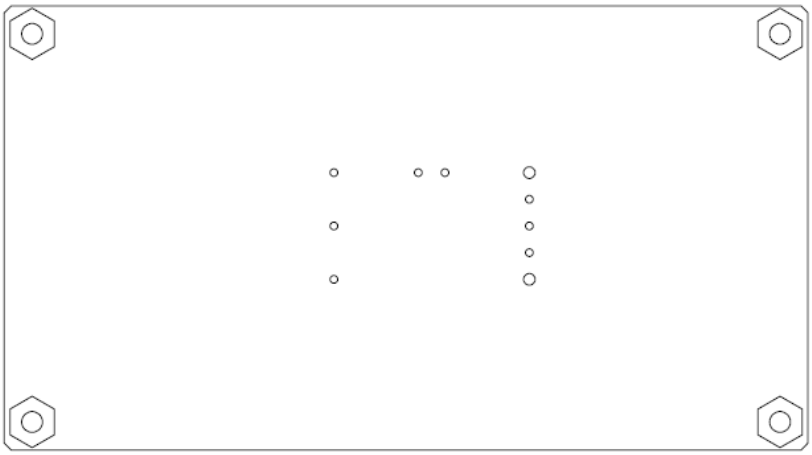

9. Schematic

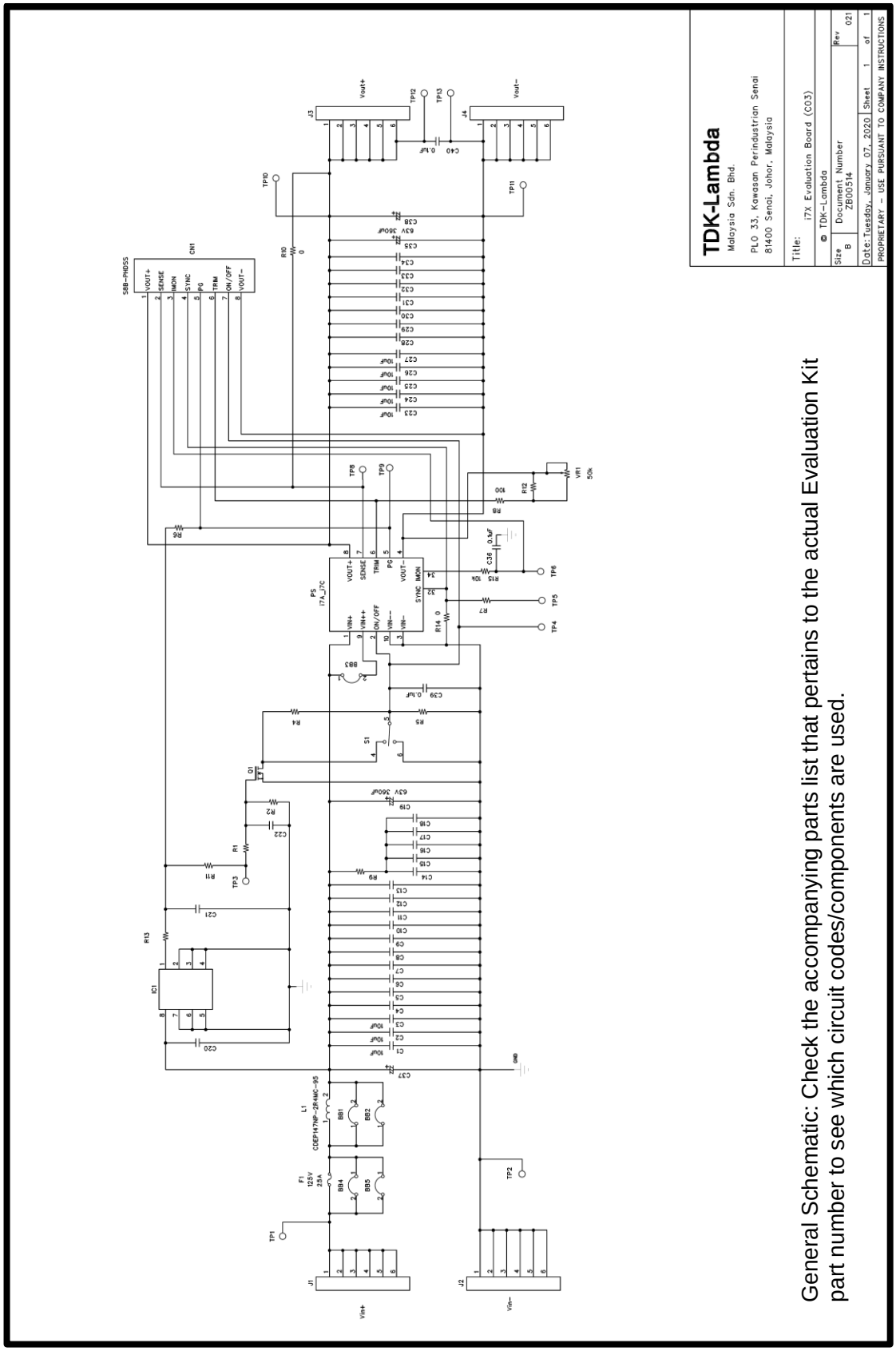

General Schematic: Check the accompanying parts list that pertains to the actual Evaluation Kit part number to see which circuit codes/components are used.

10. PCB Layout

Top Layer

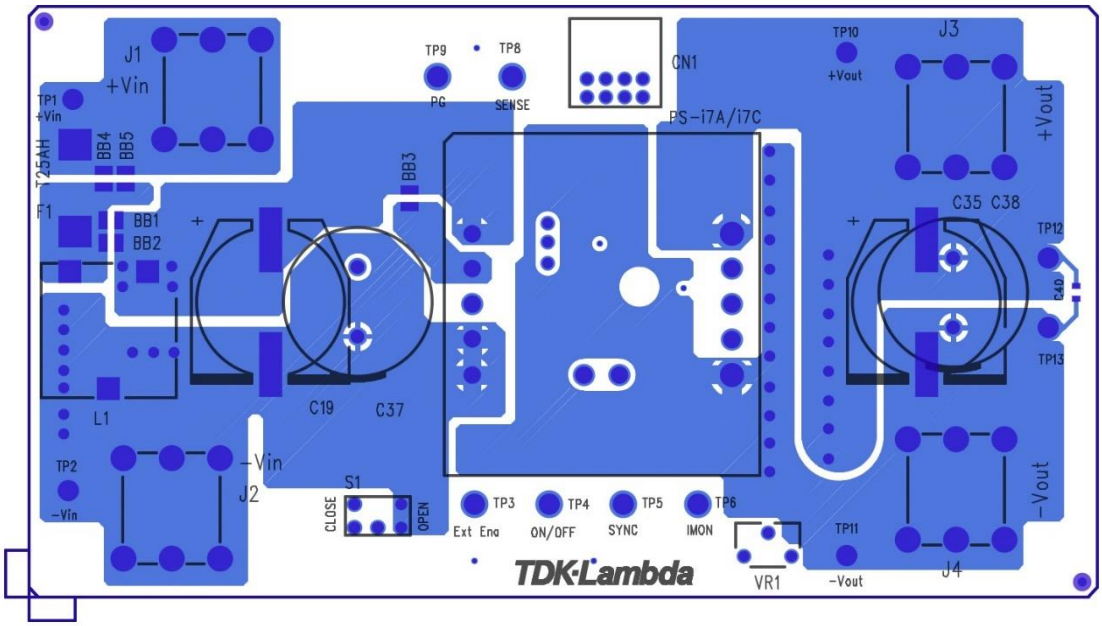

Layer 2

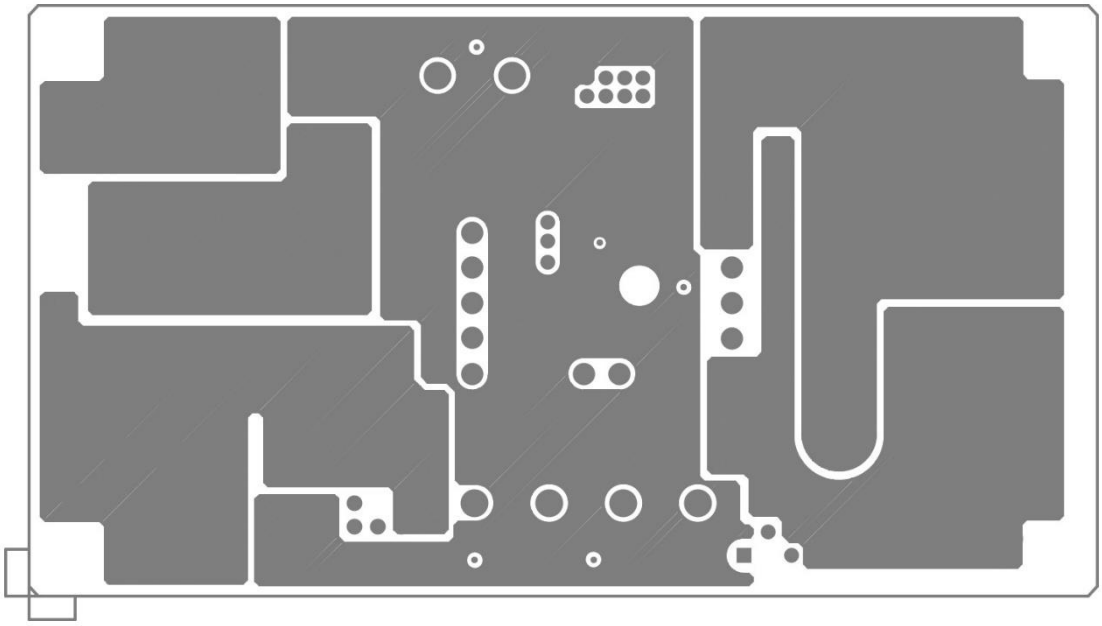

PCB Layout (continued)

Layer 3

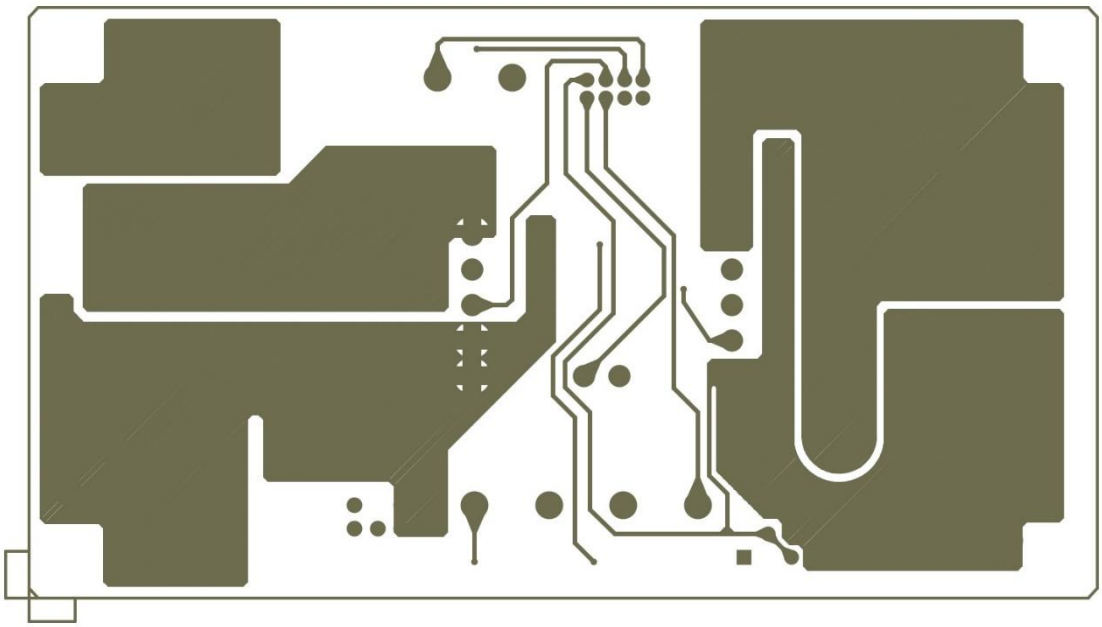

Bottom

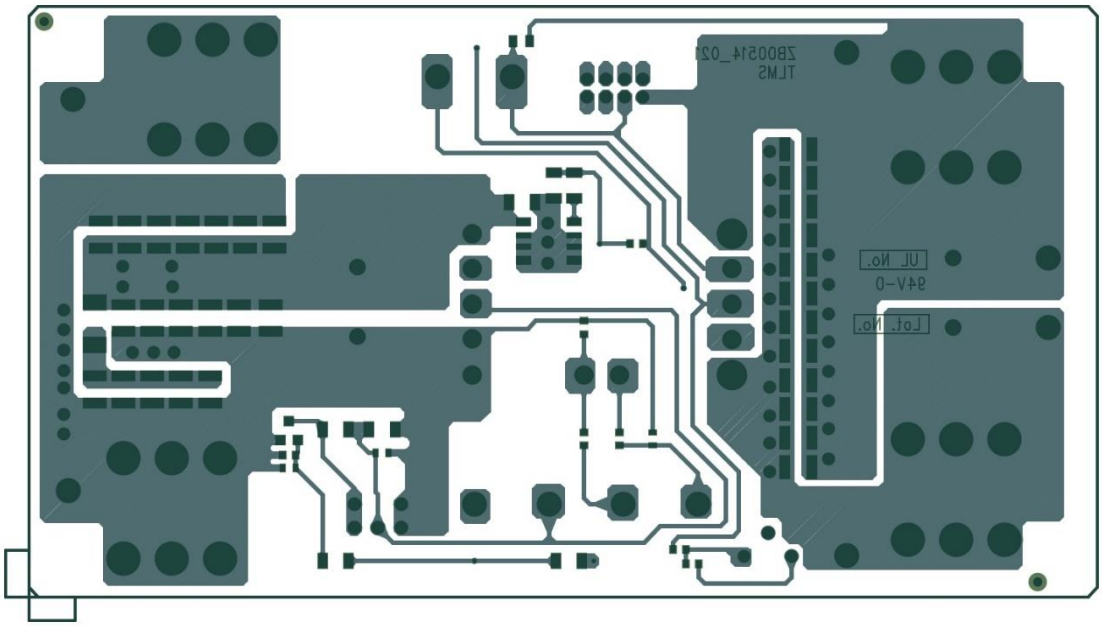

11. Parts List

Evaluation Kit Part Number		i7C08A-C03-EVK-S1		i7C12A-C03-EVK-S1	
Schematic Circuit Code	Part Type	Manufacturer (Mfr)	Mfr Part No.	Manufacturer (Mfr)	Mfr Part No.
i7A_i7C	DC-DC Module	TDK Lambda	i7C4W008A120V-003-R	TDK Lambda	i7C4W012A050V-003-R
Q1	**OMIT**	**OMIT**		**OMIT**	
C1	Capacitor	MURATA	GRM32ER71J106MA12L	MURATA	GRM32ER71J106MA12L
C2	Capacitor	MURATA	GRM32ER71J106MA12L	MURATA	GRM32ER71J106MA12L
C3	Capacitor	MURATA	GRM32ER71J106MA12L	MURATA	GRM32ER71J106MA12L
C4-C18	**OMIT**	**OMIT**		**OMIT**	
C19	Capacitor	NI-CHEMI	EMHB630ARA361MLH0S	NI-CHEMI	EMHB630ARA361MLH0S
C20-C22	**OMIT**	**OMIT**		**OMIT**	
C23	Capacitor	MURATA	GRM32ER71J106MA12L	MURATA	GRM32ER71J106MA12L
C24	Capacitor	MURATA	GRM32ER71J106MA12L	MURATA	GRM32ER71J106MA12L
C25	Capacitor	MURATA	GRM32ER71J106MA12L	MURATA	GRM32ER71J106MA12L
C26	Capacitor	MURATA	GRM32ER71J106MA12L	MURATA	GRM32ER71J106MA12L
C27	Capacitor	MURATA	GRM32ER71J106MA12L	MURATA	GRM32ER71J106MA12L
C28-C34	**OMIT**	**OMIT**		**OMIT**	
C35	Capacitor	NI-CHEMI	EMHB630ARA361MLH0S	NI-CHEMI	EMHB630ARA361MLH0S
C36	Capacitor	TDK	C1608X7S2A104KT	TDK	C1608X7S2A104KT
C37-C38	**OMIT**	**OMIT**		**OMIT**	
C39	Capacitor	TDK	C1608X7S2A104KT	TDK	C1608X7S2A104KT
C40	Capacitor	TDK	C1608X7S2A104KT	TDK	C1608X7S2A104KT
F1	**OMIT**	**OMIT**		**OMIT**	
BB1	Copper Pin	ROWLEY SPRING	ZP00185_01	ROWLEY SPRING	ZP00185_01
BB2	Copper Pin	ROWLEY SPRING	ZP00185_01	ROWLEY SPRING	ZP00185_01
BB3	**OMIT**	**OMIT**		**OMIT**	
BB4	Copper Pin	ROWLEY SPRING	ZP00185_01	ROWLEY SPRING	ZP00185_01
BB5	Copper Pin	ROWLEY SPRING	ZP00185_01	ROWLEY SPRING	ZP00185_01
IC1	**OMIT**	**OMIT**		**OMIT**	
VR1	Resistor	BOURNS	3266W-1-204LF	BOURNS	3266W-1-503LF
L1	**OMIT**	**OMIT**		**OMIT**	
R1-R6	**OMIT**	**OMIT**		**OMIT**	
R7	Resistor	KOA	RK73Z1JTTD	KOA	RK73Z1JTTD
R8	Resistor	KOA	RK73H1JTTD21R5F	KOA	RK73H1JTTD3010F
R9	**OMIT**	**OMIT**		**OMIT**	
R10	Resistor	KOA	RK73Z2ATTD	KOA	RK73Z2ATTD
R11	**OMIT**	**OMIT**		**OMIT**	
R12	Resistor	KOA	RK73H1JTTD3323F	**OMIT**	
R13	**OMIT**	**OMIT**		**OMIT**	
R14	Resistor	KOA	RK73Z1JTTD	KOA	RK73Z1JTTD
R15	Resistor	KOA	RK73H1JTTD1002D	KOA	RK73H1JTTD1002D
CN1	**OMIT**	**OMIT**		**OMIT**	
S1	Switch	LIGHT COUNTRY	2US1T1A1M2RES	LIGHT COUNTRY	2US1T1A1M2RES
J1, J2, J3, J4	Screw Terminal	KEYSTONE	8196	KEYSTONE	8196
TP1	Test Point: Vin(+)	MAC8	WT-2-2	MAC8	WT-2-2
TP2	Test Point: Vin(-)	MAC8	WT-2-2	MAC8	WT-2-2
TP3	**OMIT**	**OMIT**		**OMIT**	
TP4	Test Point: On/Off	MAC8	WT-2-2	MAC8	WT-2-2
TP5	Test Point: SYNC	MAC8	WT-2-2	MAC8	WT-2-2
TP6	Test Point: I_Mon	MAC8	WT-2-2	MAC8	WT-2-2
TP8	Test Point: SENSE+	MAC8	WT-2-2	MAC8	WT-2-2
TP9	Test Point: PG	MAC8	WT-2-2	MAC8	WT-2-2
TP10	Test Point: Vout(+)	MAC8	WT-2-2	MAC8	WT-2-2
TP11	Test Point: Vout(-)	MAC8	WT-2-2	MAC8	WT-2-2
TP12	Test Point: Vout(+)	MAC8	WT-2-2	MAC8	WT-2-2
TP13	Test Point: Vout(-)	MAC8	WT-2-2	MAC8	WT-2-2
SCR1, SCR2, SCR3, SCR4	Screw for J1, J2, J3, J4	KEYSTONE	9427	KEYSTONE	9427
SO1, SO2, SO3, SO4	Standoff	KEYSTONE	1902C	KEYSTONE	1902C

TDK·Lambda

TDK-Lambda France SAS
Tel: +33 1 60 12 71 65
france@fr.tdk-lambda.com
www.emea.lambda.tdk.com/fr

Italy Sales Office
Tel: +39 02 61 29 38 63
info.italia@it.tdk-lambda.com
www.emea.lambda.tdk.com/it

Netherlands
info@nl.tdk-lambda.com
www.emea.lambda.tdk.com/nl

TDK-Lambda Germany GmbH
Tel: +49 7841 666 0
info.germany@de.tdk-lambda.com
www.emea.lambda.tdk.com/de

Austria Sales Office
Tel: +43 2256 655 84
info@at.tdk-lambda.com
www.emea.lambda.tdk.com/at

Switzerland Sales Office
Tel: +41 44 850 53 53
info@ch.tdk-lambda.com
www.emea.lambda.tdk.com/ch

Nordic Sales Office
Tel: +45 8853 8086
info@dk.tdk-lambda.com
www.emea.lambda.tdk.com/dk

TDK-Lambda UK Ltd.
Tel: +44 (0) 12 71 85 66 66
powersolutions@uk.tdk-lambda.com
www.emea.lambda.tdk.com/uk

TDK-Lambda Ltd.
Tel: +9 723 902 4333
info@tdk-lambda.co.il
www.emea.lambda.tdk.com/il

C.I.S.
Commercial Support:
Tel: +7 (495) 665 2627
Technical Support:
Tel: +7 (812) 658 0463
info@tdk-lambda.ru
www.emea.lambda.tdk.com/ru

TDK-Lambda Americas
Tel: +1 800-LAMBDA-4 or 1-800-526-2324
powersolutions@us.tdk-lambda.com
www.us.lambda.tdk.com

TDK Electronics do Brasil Ltda
Tel: +55 11 3289-9599
sales.br@tdk-electronics.tdk.com
www.tdk-electronics.tdk.com/en

TDK-Lambda Corporation
Tel: +81-3-6778-1113
www.jp.lambda.tdk.com

TDK-Lambda (China) Electronics Co. Ltd.
Tel: +86 21 6485-0777
powersolutions@cn.tdk-lambda.com
www.lambda.tdk.com.cn

TDK-Lambda Singapore Pte Ltd.
Tel: +65 6251 7211
tls.mkt@sg.tdk-lambda.com
www.sg.lambda.tdk.com

TDK India Private Limited, Power Supply Division
Tel: +91 80 4039-0660
mathew.philip@in.tdk-lambda.com
www.sg.lambda.tdk.com

For additional information, please visit
https://product.tdk.com/en/power/