ENGLISH

General Safety Instructions:

READ SAFETY INSTRUCTIONS

Servicing:
These products are not customer serviceable TDK-Lambda UK LTD and their authorised agents only are permitted to carry out repairs.

Critical Components:
These products are not authorised for use as critical components in nuclear control systems, life support systems or equipment for use in hazardous environments without the express written approval of the Managing Director of TDK-Lambda EMEA.

Product Usage:
These products are designed for use within a host equipment which restricts access to authorised competent personnel.

This product is a component power supply and is only to be installed by qualified persons within other equipment and must be not operated as a stand alone product.
This product is for sale to business to business customers and can be obtained via distribution channels.
It is not intended for sale to end users.

This product is a component power supply and does not fall within the scope of the EMC directive. Compliance with the EMC directive must be considered in the final installation. Please contact your local TDK-Lambda office.

Environmental:
These products are IPX0, and therefore chemicals/solvents, cleaning agents and other liquids must not be used.

Environment:
This power supply is a switch mode power supply for use in applications within a Pollution Degree 2, overvoltage category II environment. Material Group IIIb PCB's are used within it.

Output Loading:
The output power taken from the power supply must not exceed the rating stated on the power supply label, except as stated in the product limitations in this handbook.

Input Parameters:
This product must be operated within the input parameters stated in the product limitations in this handbook.

End of Life Disposal:
The unit contains components that require special disposal. Make sure that the unit is properly disposed of at the end of its service life and in accordance with local regulations.

RISK OF ELECTRIC SHOCK

High Voltage Warning:
Dangerous voltages are present within the power supply**.** The professional installer must protect service personnel from inadvertent contact with these dangerous voltages in the end equipment.

WARNING: When installed in a Class 1 end equipment, this product must be reliably earthed and professionally installed.

The (+) or (-) output(s) can be earthed or left floating.

The unit cover(s)/chassis (where applicable) must not be made user accessible.

The mains input connector is not acceptable for use as field wiring terminals.

For encased products, do not use mounting screws, which penetrate the unit more than; See drawings.

Internal fuses protect the unit and must not be replaced by the user. In case of internal defect, the unit must be returned to TDK-Lambda UK LTD or one of their authorised agents.

A suitable mechanical, electrical and fire enclosure must be provided by the end use equipment for mechanical, electric shock and fire hazard protection.

Energy Hazards:
The main output of this product is capable of providing hazardous energy (240VA). Final equipment manufacturers must provide protection to service personnel against inadvertent contact with the output terminals.

The unit cover/chassis, where applicable, is designed to protect skilled personnel from hazards. They must not be used as part of the external covers of any equipment where they may be accessible to operators, since under full load conditions, part or parts of the unit chassis may reach temperatures in excess of those considered safe for operator access.

DEUTSCH

Allgemeine Sicherheitsvorschriften:

LESEN SIE DIE SICHERHEITSVORSCHRIFTEN

Wartung:
Diese Produkte können nicht durch den Kunden gewartet werden. Nur TDK-Lambda UK LTD. und deren zugelassene Vertriebshändler sind zur Durchführung von Reparaturen berechtigt.

Kritische Komponenten:
Diese Produkte sind nicht für die Verwendung als kritische Komponenten in nuklearen Kontrollsystemen, Lebenserhaltungssystemen oder Geräten in gefährlichen Umgebungen geeignet, sofern dies nicht ausdrücklich und in Schriftform durch den Geschäftsführer von TDK-Lambda EMEA genehmigt wurde.

Produktverwendung:
Diese Produkte sind zur Verwendung innerhalb von Host-Anlagen gedacht, die einen auf das Fachpersonal beschränkten Zugang haben.
Dieses Produkt ist eine Stromversorgungs-Komponente und sie darf nur von qualifiziertem Personal in andere Geräte eingebaut werden und sie darf NICHT als eigenständiges ("Stand-Alone") Gerät betrieben werden.
Dieses Produkt ist für den Verkauf an Geschäftskunden entwickelt worden und es kann über Distributionskanäle bezogen werden.
Es ist NICHT für den Verkauf an Endkunden gedacht und konzipiert.

Dieses Produkt ist eine Stromversorgungsbaugruppe und sie fällt NICHT in den Bereich der EMV Direktive.
Die Konformität mit der EMV Richtlinie muss in der finalen Gesamtinstallation betrachtet werden.
Bitte kontaktieren Sie Ihr regionales TDK-Lambda Vertriebsbüro im Falle von Rückfragen.

Umwelt:
Diese Produkte sind IPX0, aus diesem Grund dürfen keine Chemikalien/Lösungsmittel, Reinigungsmittel und andere Flüssigkeiten verwendet werden.

Umgebung:
Dieses Netzteil ist ein Schaltnetzteil zur Verwendung in einer Umgebung mit einem Verschmutzungsgrad 2, Überspannungskategorie II. Materialgruppe IIIb mit darin verwendeten PCBs.

Ausgangsstrom:
Der Ausgangsstrom des Netzteiles darf die Leistung, die auf dem Label des Netzteiles vermerkt ist, nur dann überschreiten, wenn dies in den Produktgrenzen dieses Handbuches ausgezeichnet ist.

Eingangsparameter:
Dieses Produkt muss innerhalb der Eingangsparameter, die in den Produktgrenzen dieses Handbuches angegeben sind, betrieben werden.

Entsorgung am Ende der Betriebszeit:
Das Gerät enthält Komponenten die unter Sondermüll fallen. Das Gerät muss am Ende der Betriebszeit ordnungsgemäß und in Übereinstimmung mit den regionalen Bestimmungen entsorgt werden.

GEFAHR DURCH ELEKTRISCHEN SCHLAG

Hochspannungswarnung:
Innerhalb des Netzteiles gibt es gefährliche Spannungen**.** Der Elektroinstallateur muss das Wartungspersonal vor versehentlichem Kontakt mit den gefährlichen Spannungen im Endgerät schützen.

WARNUNG! Falls Sie unser Netzgerät in eine Anwendung mit Schutzklasse 1 eingebaut haben, stellen Sie sicher, dass es fachgerecht installiert und zuverlässig geerdet ist.

Die (+) oder (-) Ausgänge können geerdet werden oder unangeschlossen bleiben.

Die Abdeckung des Gerätes/das Gehäuse darf für den Benutzer nicht zugänglich sein.

Der Haupteingangsanschluss ist nicht für die Verwendung als Feldverdrahtungsanschluss geeignet.

Für ummantelt Produkte, verwenden Sie keine Schrauben, die das Gerät mehr als durchdringen; siehe Zeichnung
Eine interne Sicherung schützt das Gerät und darf durch den Benutzer nicht ausgetauscht werden. Im Fall von internen Defekten muss das Gerät an TDK-Lambda UK LTD oder einen der autorisierten Vertriebshändler zurückgeschickt werden.

Ein geeignetes mechanisches, elektrisches und brandgeschütztes Gehäuse muss als Schutz vor der Gefahr von mechanischen Risiken, Stromschlägen und Brandschutz in dem Endgerät vorgesehen werden.

Gefahren durch elektrische Energie:
Von bestimmten Modulen kann je nach Einstellung der Ausgangsspannung gefährliche elektrische Energie ausgehen (240 VA). Die Endgerätehersteller müssen einen Schutz für Servicepersonal vor unbeabsichtigtem Kontakt mit den Ausgangsanschlüssen dieser Module vorsehen. Kann aufgrund der Einstellung gefährliche elektrische Energie auftreten, dürfen die Modulanschlüsse für den Benutzer nicht zugänglich sein.

Die Geräteabdeckung/das Gehäuse ist so entworfen, dass das Fachpersonal vor Gefahren geschützt wird. Sie dürfen nicht als Teil der externen Abdeckung für Geräte verwendet werden, die für den Betreiber zugänglich sein müssen, da Teile oder das gesamte Gerätegehäuse unter voller Auslastung übermäßige Temperaturen erreichen kann, die für den Zugang des Betreibers nicht mehr als sicher betrachtet werden.

FRANÇAIS

Consignes générales de sécurité:

LIRE LES CONSIGNES DE SECURITE

Entretien:
Ces produits ne peuvent pas être réparés par l'utilisateur. Seuls, TDK-Lambda UK LTD et ses agents agréés sont autorisés à effectuer des réparations.

Composants critiques:
Ces produits ne doivent pas être utilisés en tant que composants critiques dans des systèmes de commande nucléaire, dans des systèmes de sauvetage ou dans des équipements utilisés dans des environnements dangereux, sans l'autorisation écrite expresse du directeur général de TDK-Lambda EMEA.

Utilisation du produit:
Ces produits sont conçus pour être utilisés dans un équipement hôte dont l'accès n'est autorisé qu'aux personnes compétentes.
Ce produit est une alimentation considérée comme un composant devant être installé par des personnes qualifiées, dans un autre équipement. Il ne doit pas être utilisé en tant que produit fini.
Ce produit est destiné à la vente entre entreprises et peut être obtenu via des canaux de distribution.
Il n'est pas prévu à la vente pour les particuliers.

Ce produit est une alimentation considérée comme un composant, il ne relève pas du champ d'application de la directive CEM. Le respect de la directive CEM doit être pris en compte dans l'installation finale. Veuillez contacter votre bureau TDK-Lambda le plus proche.

Environnement:
Ces produits sont IPX0, et donc on ne doit pas utiliser des produits chimiques/solvants, des produits de nettoyage et d'autres liquides.

Environnement fonctionnel :
Cette alimentation fonctionne en mode commutation pour utilisation dans des applications fonctionnant dans un environnement avec Degré de Pollution 2 et catégorie de surtension II. Elle utilise des cartes des circuits imprimés (PCB) de Groupe IIIb.

Intensité soutirée:
L'intensité soutirée de l'alimentation ne doit pas dépasser l'intensité nominale marquée sur la plaque signalétique, sauf indications contraires dans les limitations du produit décrit dans ce manuel.

Paramètres d'entrée:
Ce produit doit être utilisé à l'intérieur des paramètres d'entrée indiqués dans les limitations du produit dans ce manuel.

Elimination en fin de vie:
L'alimentation contient des composants nécessitant des dispositions spéciales pour leur élimination. Vérifiez que cette alimentation est mise au rebut correctement en fin de vie utile et conformément aux réglementations locales en vigueur.

RISQUE DE CHOC ELECTRIQUE

Attention-Danger haute tension:
Des tensions dangereuses sont présentes dans l'alimentation. L'installateur doit protéger le personnel d'entretien contre un contact involontaire avec ces tensions dangereuses dans l'équipement final.

AVERTISSEMENT: Si ce produit est installé dans un équipement final de classe I, il doit être mis à la terre de manière fiable et installé par un professionnel averti.

Les sorties (+) ou (-) peuvent être raccordées à la terre ou laissées flotttantes.

Le couvercle/châssis de l'alimentation ne doit pas être accessible à l'utilisateur.Le connecteur d'entrée d'alimentation principale ne doit pas être utilisé comme borne de raccordement.

N'utilisez pas de vis pénétrant dans le module sur une profondeur supérieure à :Voir dessins.

Un fusible interne protège le module et ne doit pas être remplacé par l'utilisateur. En cas de défaut interne, le module doit être renvoyé à TDK-Lambda UK LTD ou l'un de ses agents agréés.

Une enceinte appropriée doit être prévue par l'utilisateur final pour assurer la protection contre les chocs mécaniques, les chocs électriques et l'incendie.

Energies dangereuses :
Certains modules peuvent générer une énergie dangereuse (240 VA) selon le réglage de tension de sortie. Le fabricant de l'équipement final doit assurer la protection des techniciens d'entretien contre un contact involontaire avec les bornes de sortie de ces modules. Si une telle tension dangereuse risque de se produire, les bornes ou les connexions du module ne doivent pas être accessibles par l'utilisateur.

Le couvercle et le châssis du module sont conçus pour protéger des personnels expérimentés. Ils ne doivent pas être utilisés comme couvercles extérieurs d'un équipement, accessible aux opérateurs car en condition de puissance maximum, des parties du châssis peuvent atteindre des températures considérées comme dangereuses pour l'opérateur.

ITALIANO

Norme generali di sicurezza:

SI PREGA DI LEGGERE LE NORME DI SICUREZZA

Manutenzione:
Il cliente non può eseguire alcuna manutenzione su questi prodotti. L'esecuzione delle eventuali riparazioni è consentita solo a TDK-Lambda UK LTD e ai suoi agenti autorizzati.

Componenti critici:
Non si autorizza l'uso di questi prodotti come componenti critici all'interno di sistemi di controllo nucleari, sistemi necessari alla sopravvivenza o apparecchiature destinate all'impiego in ambienti pericolosi, senza l'esplicita approvazione scritta dell'Amministratore Delegato di TDK-Lambda EMEA.

Uso dei prodotti:
Questi prodotti sono progettati per l'uso all'interno di un'apparecchiatura ospite che limiti l'accesso al solo personale competente e autorizzato.
Questo prodotto è da considerarsi come un alimentatore professionale componente e come tale deve essere installato da personale qualificato all'interno di altre apparecchiature e non può essere utilizzato come prodotto indipendente.
Questo prodotto non è inteso per la vendita al dettaglio o agli utilizzatori finali.

Questo alimentatore è da considerarsi come un componente e come tale non è assogettato dagli scopi della direttiva EMC. Conformità alla direttiva EMC deve essere considerata nell'installazione finale di utilizzo. Gli uffici di TDK-Lambda Sas Succursale Italiana sono a vostra disposizione per ulteriori ragguagli.

Condizioni ambientali:
Questi prodotti sono classificati come IPX0, dunque non devono essere utilizzati sostanze chimiche/solventi, prodotti per la pulizia o liquidi di altra natura.

Ambiente:
Questo prodotto è un alimentatore a commutazione, destinato all'uso in applicazioni rientranti in ambienti con le seguenti caratteristiche: Livello inquinamento 2, Categoria sovratensione II. Questo prodotto contiene schede di circuiti stampati in materiali di Gruppo IIIb.

Carico in uscita:
La potenza in uscita ottenuta dall'alimentatore non deve superare la potenza nominale indicata sulla targhetta dell'alimentatore, fatto salvo dove indicato nei limiti per i prodotto specificati in questo manuale.

Parametri di alimentazione:
Questo prodotto deve essere utilizzato entro i parametri di alimentazione indicati nei limiti per il prodotto, specificati in questo manuale.

Smaltimento:
L'unità contiene componenti che richiedono procedure speciali di smaltimento. Accertarsi che l'unità venga smaltita in modo corretto al termine della vita utile e nel rispetto delle normative locali.

RISCHIO DI SCOSSA ELETTRICA

Avvertimento di alta tensione:
All'interno dell'alimentatore sono presenti tensioni pericolose. Gli installatori professionali devono proteggere il personale di manutenzione dal rischio di contatto accidentale con queste tensioni pericolose all'interno dell'apparecchiatura finale.

ATTENZIONE: Se installato in un'attrezzatura di classe I, questo prodotto deve essere collegato a terra in modo affidabile ed installato in modo professionale.

Le uscite (+) o (-) possono essere messa a terra o lasciate isolate.

I coperchi/il telaio dell'unità non devono essere accessibili da parte dell'utente.

Il connettore dell'alimentazione principale non può essere utilizzato come terminale di collegamento di campo.

Non utilizzare viti che penetrano nell'unità per più di : Vedi disegni

Un fusibile interno protegge l'unità e non deve essere sostituito dall'utente. Nell'eventualità di un difetto interno, restituire l'unità a TDK-Lambda UK LTD o a uno dei suoi agenti autorizzati.

L'apparecchiatura finale deve includere una recinzione meccanica, elettrica e antincendio per proteggere dai pericoli di natura meccanica, dalle scosse elettriche e dai pericoli di incendio.

Pericoli energetici:
Alcuni moduli sono in grado di erogare energia pericolosa (240 VA) a seconda della tensione in uscita impostata. I produttori delle apparecchiature finali sono tenuti a proteggere il personale di manutenzione dal rischio di contatto accidentale con questi terminali dei moduli di uscita. Se impostati su livelli che non escludono l'erogazione di energia pericolosa, questi terminali o collegamenti non devono risultare accessibili da parte dell'utente.

Il coperchio/telaio dell'unità è realizzato per proteggere il personale esperto dai pericoli. Non deve essere usato come parte degli involucri esterni di qualsiasi apparecchiatura, se risulta accessibile da parte degli addetti, poiché è possibile che in condizioni di pieno carico una o più parti del telaio dell'unità giunga/giungano a temperature superiori ai limiti considerati sicuri per l'accesso da parte degli addetti.

ESPAÑOL

Instrucciones generales de seguridad:

LEA LAS INSTRUCCIONES DE SEGURIDAD

Servicio:
Estos productos no pueden ser reparados por los clientes. TDK-Lambda UK LTD. y sus agentes autorizados son los únicos que pueden llevar a cabo las reparaciones.

Componentes fundamentales:
Estos productos no pueden ser utilizados como componentes fundamentales en sistemas de control nuclear, sistemas de soporte vital o equipos a utilizar en entornos peligrosos sin el consentimiento expreso por escrito del Director General de TDK-Lambda EMEA.

Uso de los productos:
Estos productos han sido diseñados para ser utilizados en un equipo central que restrinja el acceso al personal cualificado autorizado.
Este producto es una fuente de alimentación y sólo puede ser instalado por personal cualificado dentro de otros equipos y no debe ser tratado como un producto independiente. Este producto debe ser vendido entre empresas profesionales y solo puede obtenerse a través de los canales de distribución .No está destinado para la venta a usuarios finales

Este producto es una fuente de alimentación y no se ve afectada por la directiva EMC . El cumplimiento de la directiva EMC se debe considerar en la instalación final. Por favor, póngase en contacto con su oficina local de TDK – Lambda.

Medioambiental:
Estos productos son IPX0 y, por tanto, no pueden utilizarse sustancias químicas/disolventes, agentes de limpieza ni otros líquidos.

Medio ambiente:
Esta fuente de alimentación es una fuente de alimentación de modo conmutado a utilizar en aplicaciones dentro de un entorno con un Grado de contaminación 2 y una Categoría de sobretensión II. En él se utilizan policloruros de bifenilo del Grupo de materiales IIIb.

Carga de salida:
La potencia de salida tomada de la fuente de alimentación no puede sobrepasar el valor nominal indicado en la etiqueta de la fuente de alimentación, excepto en los casos indicados en las limitaciones del producto en este manual.

Parámetros de entrada:
Este producto debe ser utilizado dentro de los parámetros de entrada indicados en las limitaciones del producto en este manual.

Desecho de la unidad:
La unidad contiene componentes que deben ser desechados de una manera especial. Asegúrese de desechar correctamente la unidad al final de su vida útil y conforme a las normas locales vigentes.

PELIGRO DE DESCARGAS ELÉCTRICAS

Advertencia de alta tensión:
En esta fuente de alimentación hay tensiones peligrosas. El instalador profesional debe proteger al personal de servicio contra cualquier contacto accidental con estas tensiones peligrosas en el equipo final.

ADVERTENCIA: La instalación de este producto en un equipo de clase I la deben llevar a cabo profesionales y el producto debe estar conectado a tierra.

La salida o salidas (+) o (-) pueden conectarse a tierra o se las puede dejar flotando.

Debe impedirse el acceso de los usuarios a la cubierta o cubiertas y al chasis de la unidad.

El conector de entrada de la red no es apto para ser utilizado a modo de bornes de cableado de campo.

No utilice tornillos de montaje susceptibles de penetrar en la unidad más de: Ver dibujos.

Un fusible interno protege la unidad y este no debe ser nunca reemplazado por el usuario. En caso de existir algún defecto interno, la unidad debe ser enviada a TDK-Lambda UK LTD o a uno de sus agentes autorizados.

El equipo de uso final debe constituir un recinto de protección mecánica, eléctrica y contra incendios de protección mecánica, contra descargas eléctricas y contra el peligro de incendios.

Peligros de energía:
Algunos módulos pueden generar energía peligrosa (240VA) dependiendo de la configuración de la tensión de salida. Los fabricantes de equipos finales deben proteger al personal de servicio contra un contacto accidental con estos bornes de salida de los módulos. Si se configura de modo que pueda generarse energía peligrosa, hay que evitar que el usuario pueda acceder a los bornes o conexiones del módulo.

La cubierta/chasis de la unidad ha sido diseñada para que proteja a las personas cualificadas de los peligros. No deben ser utilizadas como parte de las cubiertas externas de cualquier equipo al que pueden acceder los operarios, ya que bajo unas condiciones de carga completa, la pieza o piezas del chasis de la unidad pueden alcanzar temperaturas superiores a las consideradas seguras para el acceso de los operarios.

PORTUGUÊS

Instruções gerais de segurança:

LEIA AS INSTRUÇÕES DE SEGURANÇA

Manutenção:
Estes produtos não são podem ser submetidos a manutenção por parte do cliente. Apenas a TDK-Lambda UK LTD e os seus agentes autorizados têm permissão para realizar reparações.

Componentes essenciais:
Não é autorizada a utilização destes produtos como componentes essenciais de sistemas de controlo nuclear, sistemas de suporte de vida ou equipamento para utilização em ambientes perigosos sem a expressa autorização por escrito do Director-Geral da TDK-Lambda EMEA.

Utilização do produto:
Estes produtos foram concebidos para utilização dentro de um equipamento de alojamento que apenas permita o acesso a pessoal qualificado autorizado.
Este produto é uma alimentaçao considerado com um componente para ser instalado por pessoas qualificadas, em outros equipamentos. Não deve ser usado como um produto acabado.
Este produto é destinado para venda entre as empresas e pode ser obtido através de canais de distribuição.
Não se destina à venda aos particulares.

Este produto é uma alimentaçao considerado com um componente, não é dentro do appliquation âmbito da directiva CEM.
Conformidade com a directiva CEM devem ser considerados na instalação final.
Entre em contacto com seu escritório TDK-Lambda mais próximo.

Ambiental:
Estes produtos são IPX0 e, como tal, não se devem utilizar químicos/solventes, agentes de limpeza e outros líquidos.

Ambiente:
Esta fonte de alimentação é uma fonte de alimentação do modo de comutação para utilização em aplicações com um Nível de Poluição 2 e ambientes da categoria de sobretensão II. São utilizadas placas de circuitos impressos do grupo de materiais IIIb.

Carga de saída:
A potência de saída extraída da fonte de alimentação não deve exceder a classificação assinalada na etiqueta da fonte de alimentação, excepto quando indicado nas limitações do produto neste guia.

Parâmetros de entrada:
Este produto deve ser utilizado dentro dos parâmetros de entrada indicados nas limitações do produto neste guia.

Eliminação no fim de vida:
A unidade contém componentes que necessitam de procedimentos especiais de eliminação. Certifique-se de que a unidade é devidamente eliminada no fim da sua vida útil e que tal é feito em conformidade com os regulamentos locais.

RISCO DE CHOQUE ELÉCTRICO

Aviso de alta tensão:
Estão presentes tensões perigosas dentro da fonte de alimentação. O profissional que realizar a instalação deve proteger o pessoal de assistência contra contactos inadvertidos com estas tensões perigosas do equipamento final.

AVISO: Quando instalado num equipamento de Classe I, este produto deve ser ligado à terra de forma fiável e instalado por um profissional.
.

As saídas (+) e (-) podem ser ligadas à terra ou deixadas soltas.

O chassis/cobertura(s) da unidade não deve estar acessível ao utilizador.

O conector de entrada de alimentação não deve ser utilizado como terminal de cablagens no local.

Não utilize parafusos de montagem, uma vez que estes penetrarão na unidade em mais do que: Veja os desenhos

Existe um fusível interno que protege a unidade e que não deve ser substituído pelo utilizador. Em caso de defeito interno, a unidade deve ser devolvida à TDK-Lambda UK LTD ou a um dos seus agentes autorizados.

O equipamento de utilização final deve fornecer um bastidor com protecção mecânica, eléctrica e contra incêndios adequada.

Perigos de energia:
Alguns módulos tem a capacidade de fornecer energia perigosa (240 VA), de acordo com a configuração da tensão de saída. O equipamento final do fabricante deve garantir que o pessoal de assistência está protegido contra contactos inadvertidos com estes terminais de saída do módulo. Se essa energia perigosa for produzida, as ligações e os terminais do módulo não devem ser acessíveis pelos utilizadores.

O chassis/cobertura da unidade está concebido de forma a proteger o pessoal especializado de perigos. Não devem ser utilizados como parte das coberturas externas de qualquer equipamento em que possam estar acessíveis aos operadores, uma vez que em condições de carga máxima, algumas peças do chassis da unidade podem atingir temperaturas superiores às consideradas seguras para o acesso do operador.

TDK-Lambda UK Ltd
Kingsley Avenue, Ilfracombe
Devon, EX34 8ES
Telephone - Sales and Service +44 (0)1271 856666
Head Office and Works +44 (0)1271 856600
Facsimile +44 (0)1271 864894
WEBSITE: www.uk.tdk-lambda.com

TDK·Lambda

TPS3000 SERIES POWER SUPPLY OPERATION MANUAL

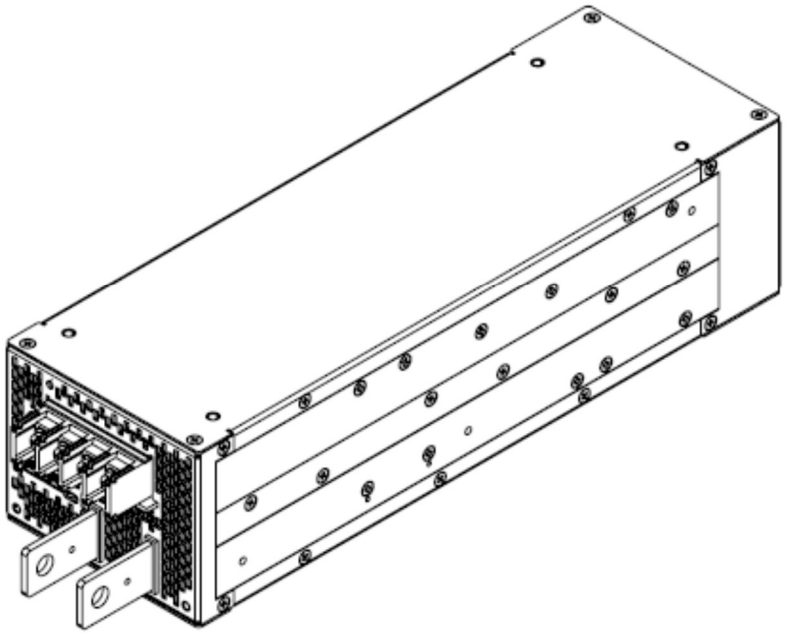

GENERAL SAFETY INSTRUCTIONS 2
High Voltage Warning 2
Critical Components 2
Servicing 2
Safety Class of Protection 2
Installation 2
Ratings, Specifications and Features 4
Emissions 4
Immunity 4
Maximum Ratings 5
Input Specifications 5
Output Performance Specifications 6
Protective Functions 6
Operating Modes 6
DC Output Controls and Indicators 7
Remote Control Features 7
PMBus Features 8
Input, Output and Signal Connections 8
Signal Connector 9
Local Sense Setup 11
Remote Sense Setup 11
Parallel Operation Setup 12
Series Operation Setup 14
Ripple and Noise Notes 16
Mechanical Drawing 17
PMBus Interface 18

2 November 2021

GENERAL SAFETY INSTRUCTIONS

High Voltage Warning

Dangerous voltages are present within the power supply.

Critical Components

This product is not authorized for use as a critical component in nuclear control systems, life support systems or equipment for use in hazardous environments without the express written approval of the Engineering Director of TDK-Lambda Americas.

Servicing

This product is not customer serviceable.
Unit repairs shall only be carried out by TDK- Lambda Americas or their Authorized agents.

Contact: TDK-Lambda Americas
401 Mile of Cars Way, Suite 325
National City, CA 91950
Tel 619-575-4400
Fax 619-575-7185

Safety Class of Protection

The unit is designed for the following parameters: Material Group IIIb, Pollution Degree 2, Overvoltage Category II, Class 1 (earthed), Indoor use. The unit is considered as fixed and rated IPX0. The TPS300024 and TPS300048 are classed as having SELV outputs. All outputs are capable of providing hazardous energy (>240VA). The final equipment should provide protection to service personnel against inadvertent contact with the PSU output terminals.

Installation

This product is designed for use within other equipment which restricts access to Authorized competent personnel only. The unit covers/chassis must not be made user accessible.

The appliance may be mounted in any orientation.

The mains input connector is not acceptable for use as field wiring terminals.
The appliance must be securely mounted and earthed before any connection to AC mains supply is made.

The ventilation openings must not be impeded – ensure a space at least 5cm between any obstruction and the ventilation openings.

BEFORE USING THE POWER SUPPLY UNIT

Be sure to read this instruction manual thoroughly before using this product. Pay attention to all cautions and warnings before using this product. Incorrect usage could lead to an electrical shock, damage to the unit or a fire hazard.

⚠ DANGER

- Never use this product in locations where flammable gas or ignitable substances are present.

⚠ WARNING

- Do not make unauthorized changes to power supply unit, otherwise you might have electric shock and void your warranty.
- Do not touch this unit and the internal components in operation or shortly after shut down. They might have high voltage or high temperature and as the unit dissipates its heat so the surface of the unit is hot. You might receive electric shock or burn.
- When the unit is operating, keep your hands and face away from it; you might be injured by an accident.
- Do not use unit under unusual conditions such as emission of smoke or abnormal smell and sound etc. It might cause fire and electric shock. In such case, please contact us; do not repair by yourself, as it is dangerous for the user.

- Do not drop or insert anything into unit. It might cause failure and fire.
- Do not operate these units under condensation condition. It might cause fire and electric shock.

⚠ CAUTION

- As a component part, compliance with the standard will be based upon installation in the final application. This product must be installed in a restricted access location, accessible to authorized competent personnel only. These AC to DC converters have reinforced insulation between the input and the output. The outputs of these products are energy hazards. The equipment has been evaluated for use in a Pollution Degree 2 environment.
- This product is designed for use within other equipment or enclosures which restrict access to authorized competent personnel only and must not be user accessible. Confirm connections to input/output terminals and signal terminals are correct as indicated in the instruction manual.
- Input voltage, Output current, Output power, ambient temperature and ambient humidity should be used within specifications, otherwise the unit will be damaged.
- For application equipment, which requires very high reliability (Nuclear related equipment, traffic control equipment, medical equipment, etc.), please provide fail safety function in the equipment.
- Do not use the product in environment with strong electromagnetic field, corrosive gas and conductive substance.
- Do not operate and store this unit at an environment where condensation occurs. In such case, waterproof treatment is necessary
- Never operate the unit under over current or shorted conditions for 30 seconds or more and out of Input Voltage Range as specification. Insulation failure, smoking, burning or other damage might occur to the unit.
- The output voltage of this power supply unit is considered to be a hazardous energy level (The voltage is 2V or more and the electric power is 240VA or more). Prevention from direct contact with output terminal is highly necessary. While installing or servicing this power supply unit, avoid dropping tools by mistake or direct contact with output terminal. This might cause an electrical shock. While repairing this power supply unit, the AC input power must be switched off and the input and output voltage should be level.
- To maintain the SELV output, under fault conditions, the output must be connected to earth in the final application.
- The application circuits and their parameter are for reference only. Be sure to verify effectiveness of application circuits and their parameters before finalizing circuit design.
- Do not inject abnormal voltage to output terminal and signal terminal from the outside. The injection of reverse voltage or over voltage exceeding nominal output voltage to output terminals might cause damage to internal components.
- This information in this document is subject to change without prior notice. For actual design-in, please refer to the latest publications of data sheet, etc., for the most up-to date specifications of the unit.

CE Marking, when applied to a product or packing material for a product covered by this handbook, indicates compliance with the Low Voltage Directive and RoHS Directive.

UKCA Marking, when applied to a product or packing material for a product covered by this handbook, indicates compliance with the Electrical Equipment (Safety) Regulations and Restriction of the Use of Certain Hazardous Substances in Electrical & Electronic Equipment Regulations.

Ratings, Specifications and Features

Emissions		
AC Line Conducted Emissions	EN 55022: 2010+AC: 2011	(0.15-30 MHz) Class A
Radiated RF Emissions	EN55032/EN55022/ EN55011	0-1000 MHz Class A
Immunity		
Electrostatic Discharge	IEC61000-4-2: 2008	+/-8 kV Air +/-4 kV Contact
RF Radiated Fields	EN 61000-4-3: 2006 +A1:2008 +A2:2010	3 V/m from 80-1000 MHz (80% AM at 1kHz)
Electrical Fast Transients	EN61000-4-4: 2004+A1:2010	Power line pulses of ± 1 kV; I/O line pulses of ± 0.5 kV
Lightning Surge	IEC61000-4-5: 2005	±4kV common mode, ±2kV differential mode
Conducted RF Common Mode	EN61000-4-6: 2009	150 kHz - 80 MHz at 3 Vrms 1 kHz 80% amplitude modulated
Power Frequency Magnetic Field	IEC61000-4-8:2009	30A/m (Continuous), 300A/m (Short)
Voltage Dips/Short Variations	IEC61000-4-11:2004	5% of nom. line for .5 cycles - Criteria B 70% for 25 cycles - Criteria B 40% for 5 cycles - Criteria B 95% Dip for 5 seconds - Criteria B
Voltage Dips/Short Variations	SEMI F47-0706	50% of nom. line for 10 cycles - Criteria B 70% for 25 cycles - Criteria B 80% for 50 cycles - Criteria B 0% for 1 cycle - Criteria B 80% for 10 seconds - Criteria B 95% Dip for 5 seconds - Criteria B
Regulatory		
RoHS	Refer to EU DECLARATION OF CONFORMITY for details	

Table 1

Maximum Ratings			
	Units	TPS300024	TPS300048
Output Voltage Range[1]	V	19.5-28.5	38.4-56.5
Maximum Output Current (Power) @ 50°C[2]	A(W)	133.3(3200)	66.7(3200)
Maximum Output Current (Power) @ 50°C[3]	A(W)	125(3000)	66.7(3200)
Maximum Output Current (Power) @ 60°C[3]	A(W)	100(2400)	50(2400)
Maximum Output Current (Power) @ 70°C[3]	A(W)	68.75(1650)	34.375(1650)
Maximum Output Power with Dropped Phase[4]	A(W)	53.75(1290W @ 350VAC) 65(1560W @ 400VAC) 81.25(1950W @ 480VAC) 87.5(2100W @ 528VAC)	26.875(1290W @ 350VAC) 32.5(1560W @ 400VAC) 40.625(1950W @ 480VAC) 43.75(2100W @ 528VAC)
Minimum Current[5]	A	0.5	
Operating Temperature	°C	-10°C to 50°C. Derating 50°C-60°C - 2%/C, 60°C-70°C 2.5%/C	
Start-up Temperature	°C	-40°C to +70°C	

Table 2

[1] Output voltage can be adjusted to be outside of the specified range. It is advised to limit the voltage to within the range.
[2] Output adjustment at 24V only. Horizontal Mounting configuration only
[3] Output current and power, as measured at output terminals, must be less than or equal to quoted maximum values for a given ambient temperature.
[4] Unit is able to handle the specified output power during dropped phase. Other specifications may not be met. Dropped phase should only be a temporary condition. Prolonged operation under dropped phase may result in decreased lifespan of the product.
[5] Minimum current must be applied to meet all specifications. Without minimum power, some specifications may not be met.

Input Specifications			
	Units	TPS300024	TPS300048
Input Voltage		VAC 400/480 (50/60Hz) Three Phase Delta	
Input Current (RMS) Per Phase 400-480VAC input	A	5.5	5.5
Inrush Current (Peak, at cold start) Per Phase, 400-480VAC input *	A	<15	<15
Power Factor (at max output power)	-	0.92 typical @ 400/480VAC line	
Input EMI Conducted Emissions	-	FCC Class A, CISPR 22 Class A	
Efficiency (at max output power)	%	92 typical @ 400/480VAC line	
Input Protection	-	10A 600V Fast Acting Fuse – Present on each phase (3 total) Internal – Not user accessible	

Table 3

*excluding initial spike charging EMI capacitors lasting <2mS

Output Performance Specifications			
	Units	TPS300024	TPS300048
Max Voltage Line Regulation	%	Less than 0.25%	
Max Voltage Load Regulation	%	Less than 0.5%	
Total Regulation	%	Less than 1.75%	
Warm up Drift	%	Less than 0.15%	
Temperature Stability	-	0.05% of rated Vout for 8hrs after 30min warm-up. Constant line, load & temp.	
Temperature Coefficient	ppm/°C	200ppm/C	
Ripple/Noise P-P(20MHz), JEITA RC-9131C[6]	mVp-p	240	480
Output Ripple, JEITA RC-9131C[6]	mVrms	<0.5% of Vout	
Remote Sense Compensation (Total)	V	1.0V	1.0V

Table 4

[6]See Ripple and Noise Notes for Details on Jeita RC-9131C method; All Three Phases present

Protective Functions			
	Units	TPS300024	TPS300048
OCP TYPE	-	CONSTANT CURRENT	
OCP KNEE POINT[7]	-	Adjustable (70% - 105% of max rated current)	
KNEE POINT PROTECTION	-	NONE. NO DAMAGE AT KNEE POINT	
S/C PROTECTION	-	CONSTANT CURRENT w/ time-delayed shutdown.	
SHORTED OUTPUT ON	-	NO DAMAGE	
OVP TYPE	-	Tracking, Inverter shut-down, manual reset by AC input recycle or by On/Off control.	
OVP RANGE	-	Vout*1.15	
OVP RESET TIME	s	Less than 5s AC recycle or remote ON/OFF toggle	
OTP	-	Yes. Standard: Non-Latch type (automatic reset),	

Table 5

[7] OCP Knee point can physically be adjusted to a value greater than 105% of max rated current. It is advised to limit the current to 105% max.

Operating Modes	
Series Operation	Yes
Parallel Operation	Current share single wire (Terminal 1 on Signal Connector), 10% accuracy of max Iout up to 8 units. Power derated 10% of rated. No Oring diodes are required for redundant operation as the power supplies contain internal Oring MOSFETS.

Table 6

DC Output Controls and Indicators	
Output Voltage Adjust	Screwdriver adjustment over entire range. Output voltage range is specified in Table 2. (Multi-turn potentiometer accessible from terminal end of chassis.)
Overcurrent Protection Adjust	Screwdriver adjustable (70% - 105% of max rated current)
DC OK	LED: Green when output >90% of set voltage, Red when fault. LED will turn off when unit enters OTW range.
AC ON	LED: Green when AC is present Blinking RED/GRN when phase dropped (Applicable for 400/480 with 20% Load or greater).

Table 7

Remote Control Features	
Remote Voltage Sensing	Provides precise regulation directly at load. Maximum total DC voltage drop between output terminals and load must be limited to <1.0 V. In addition, the voltage at the output terminals must be limited to the maximum voltage range specified in Table 2.
Remote On/Off Control	On/Off control: Selectable Enable or Inhibit via front panel switch. Switch in the ON position: Unit powers up if PSON left open; Unit in standby mode if PSON shorted to -SNS Switch in the OFF position: Unit in standby mode if PSON left open; Unit powers up if PSON shorted to -SNS PSON High / Low thresholds: 3.0V / 0.6V 12V Maximum allowable. -5V Minimum allowable Signal applied between terminals 14 (PSON) and 18 (-SNS) on Signal Connector.
Remote Voltage Programming	Provides remote adjustment of the output voltage via a DC voltage applied between terminals 3 (VADJ) and 18 (-SNS) on Signal Connector. 0V = Vout max, 5V = Vout min Adjustments of greater than 1V/Sec can cause Fault conditions Adjustment range changes with adjustment of V_{out} Adj trim pot.
Remote Overcurrent Limit Programming	Provides remote adjustment of the Overcurrent limit via a DC voltage applied between terminals 10 (IADJ) and 18 (-SNS) on Signal Connector. 0V = Iout max, 5V = Iout min Adjustment range changes with adjustment of I_{LIMIT} ADj trim pot.

Table 8

PMBus Features	
Output Voltage Monitoring	Output voltage monitoring via the PMBus. Accuracy of the voltage reading is +/-2% of full scale
Output Current Monitoring	Output current monitoring via the PMBus. Accuracy of the current reading is +/-10% of full scale
Remote On/Off Control	Supply ON/OFF control via the PMBus
Remote Voltage Programming	Provides remote adjustment of the output voltage via the PMBus interface. Adjustments of greater than 1V/Sec can cause Fault conditions
Remote Overcurrent Limit Programming	Provides remote adjustment of the Overcurrent limit via the PMBus interface.

Table 9

Input, Output and Signal Connections	
Input	Heavy Duty terminal block with M4 screws. Grounding terminal included on terminal block.
DC Output	Heavy-duty bus bars with 9mm clearance hole for load connections.
Signal Connector	20 pin signal connector. See Table 11 for pin configuration Recommended mating connector: JST P/N: PHDR-20VS Recommended receptacle contacts: JST P/N: SPHD-001T-P0.5
Address Pin / PMBus Voltage Selector Pin	10 pin connector. Rows 1-4 used for PMBus address selection. Row 5 used to select PMBus Voltage Selection. Open = 5V; Short = 3.3V Recommended shunt jumper: Samtec P/N: 2SN-BK-G

Table 10

Signal Connector		
Name	Terminal Location	Description
ISHARE	1	Current share single wire.
Iout	2	Current monitor signal. 0V = Iout min, 5V = Iout max. Terminal 18 used for Return.
VADJ	3	Remote Voltage Programming Terminal. Terminal 18 used for Return. Provides remote adjustment of Output Voltage via an applied DC voltage 0V = Vout max, 5V = Vout min.
SDA	4	Data Line for I2C
OTW	5	Over Temperature Warning Open collector. Non Polarized, 60V peak, Max. sink current: $5mA_{DC}$. 2Ω ON resistance, Isolated Terminal 7 used for Return.
SCL	6	Clock Line for I2C
RTN (OTW)	7	Return for Terminal 5
SMB ALERT	8	Interrupt Line for I2C
PHASE OK	9	Open collector. Max. sink current: 5mA. Off (open) when OK, strobing when input phase missing (Applicable for 400/480 with 20% Load or greater). Open collector. Non Polarized, 60V peak, Max. sink current: $5mA_{DC}$. 2Ω ON resistance, Isolated
IADJ	10	Provides remote adjustment of the overcurrent limit via an applied DC voltage. 0V = Iout max, 5V = Iout min Terminal 18 used for Return.
RTN (PHASE OK)	11	Return for Terminal 9
SMB GND	12	Return for I2C (Terminal 4, Terminal 6 and Terminal 8)
RTN (AC OK)	13	Return for Terminal 15
PSON	14	Remote On/Off control. See Remote Control Features section for additional details. Terminal 18 used for Return.
ACOK	15	On when Vin>340Vac AND unit enabled. Turns off 5mS before DC FAIL at nominal Vout, 80% of rated load. Open collector. Non Polarized, 60V peak, Max. sink current: $5mA_{DC}$. 2Ω ON resistance, Isolated
+SNS	16	Positive Sense. Used for remote sense connection.
DC OK	17	Conducts when Vout is greater than 90% of the set output voltage (Tracking) Open collector. Non Polarized, 60V peak, Max. sink current: $5mA_{DC}$. 2Ω ON resistance, Isolated
-SNS	18	Negative Sense. Used for remote sense connection. Analog Signals return
RTN (DC OK)	19	Return for Terminal 17
+12V	20	Auxiliary Power Supply: 11.2-12.5V, 0-0.3A. Less than 200mVp-p ripple and noise.

Table 11

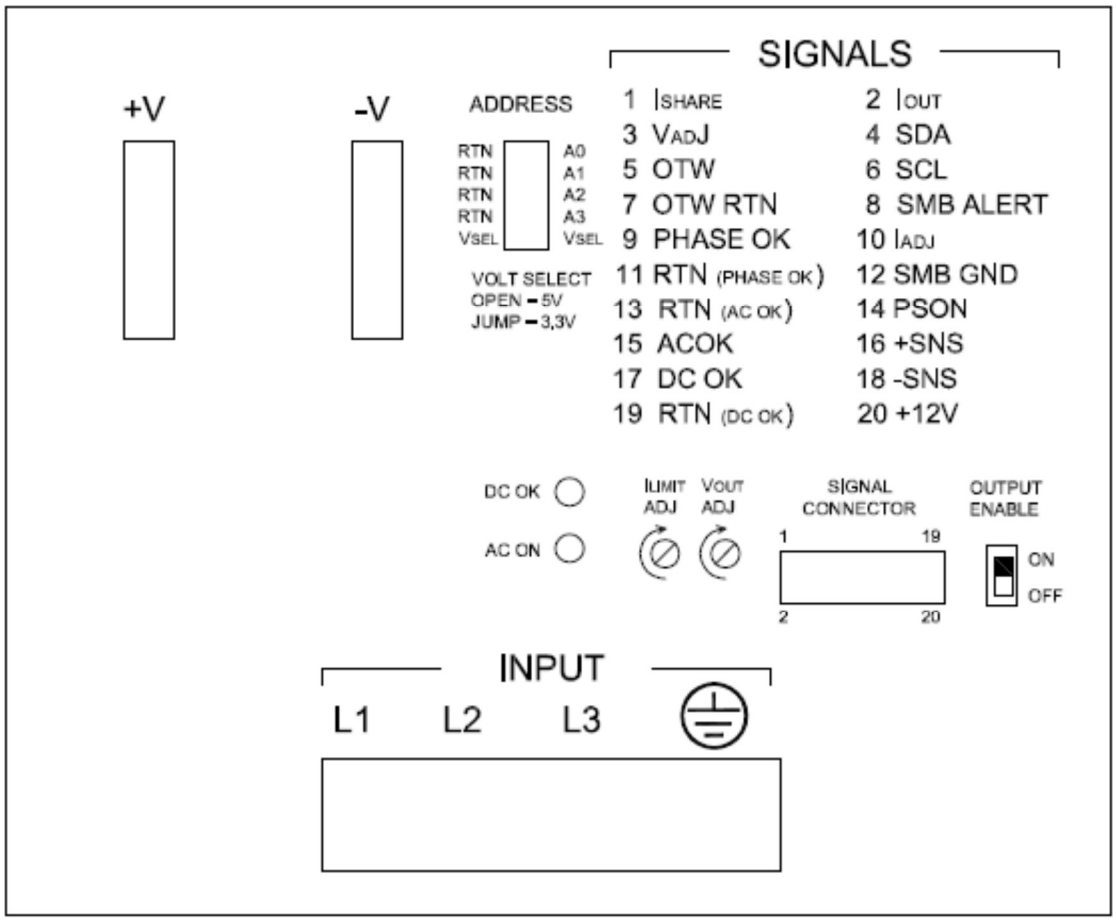

Figure 1: Pin assignments

Local Sense Setup

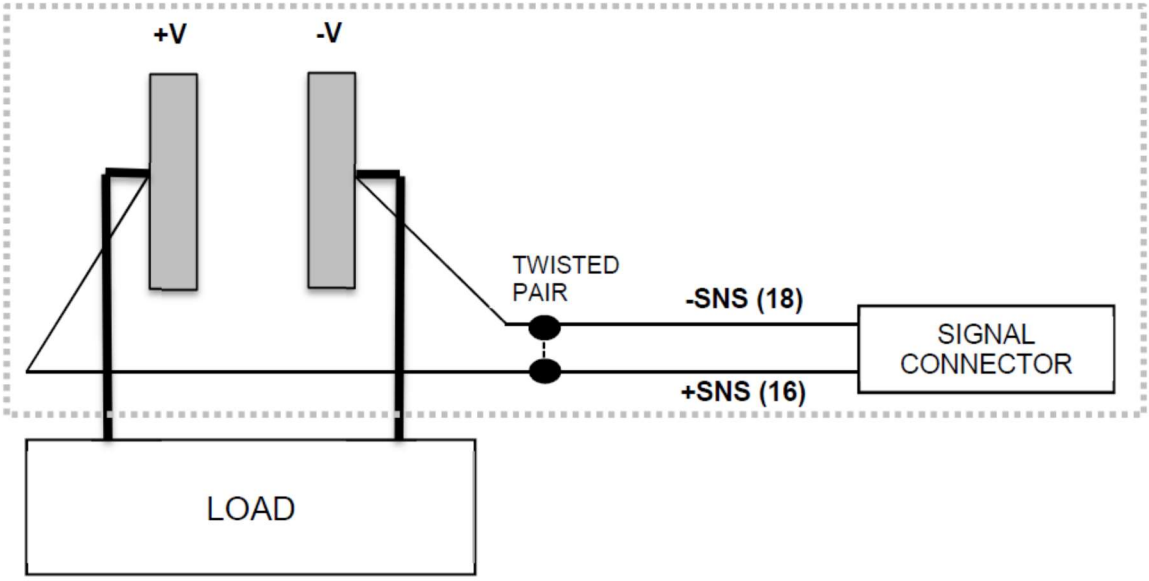

Figure 2: Typical Local Sense Connection

Remote Sense Setup

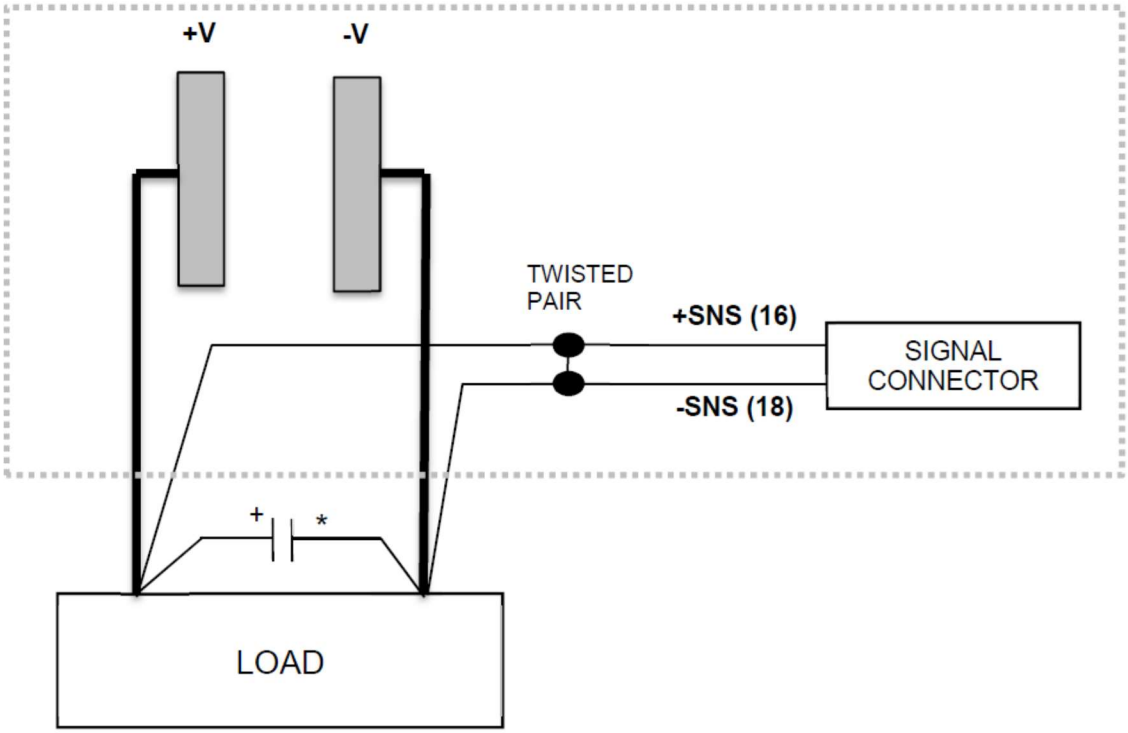

Figure 3: Typical Remote Sense Connection

* Suitable Decoupling Capacitor (0.1uF or higher) may be required at load.

Parallel Operation Setup

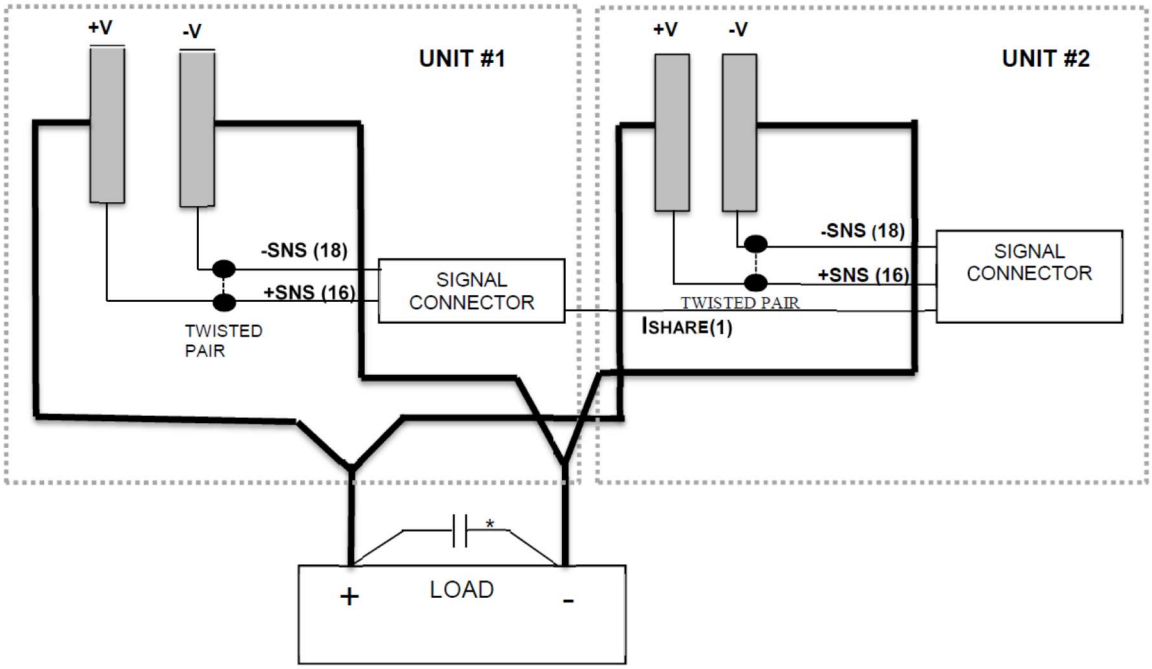

Figure 4: Parallel Operation (Local Sensing)

*Suitable Decoupling Capacitor (0.1uF or higher) may be required at load.

For optimal performance, power supplies should have their output voltages set to within 1% of each other

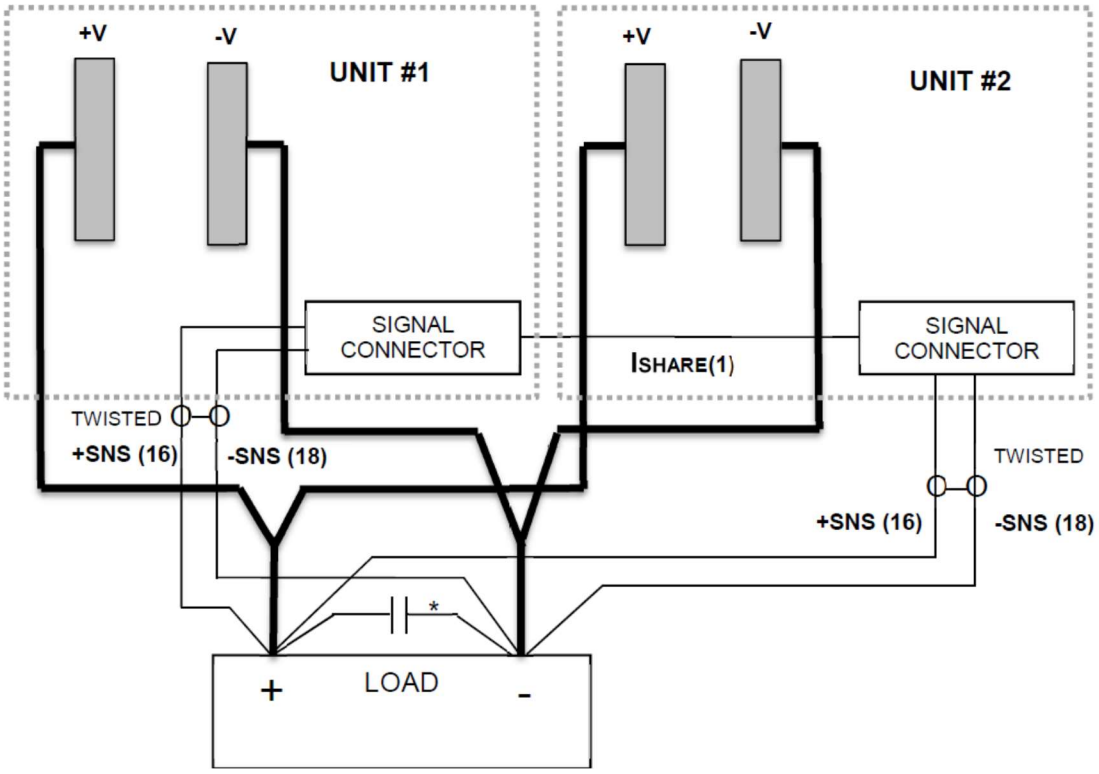

Figure 5: Parallel Operation (Remote Sensing)

*Suitable Decoupling Capacitor (0.1uF or higher) may be required at load.

For optimal performance, power supplies should have their output voltages set to within 1% of each other

Series Operation Setup

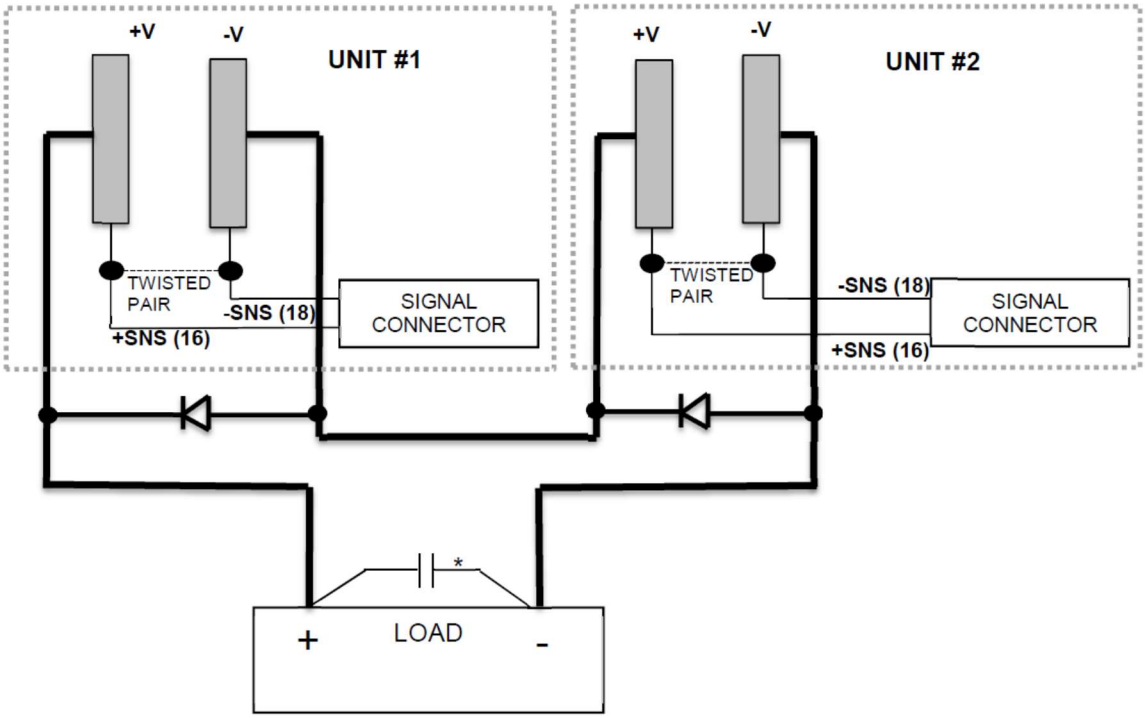

Figure 6: Series Operation (Local Sensing)

*Suitable Decoupling Capacitor (0.1uF or higher) may be required at load.

Note: It is recommended that diodes rated a minimum of 50V be used for any TPS3000-24 units operated in series and diodes rated at a minimum of 100V be used for any TPS3000-48 units operated in series.

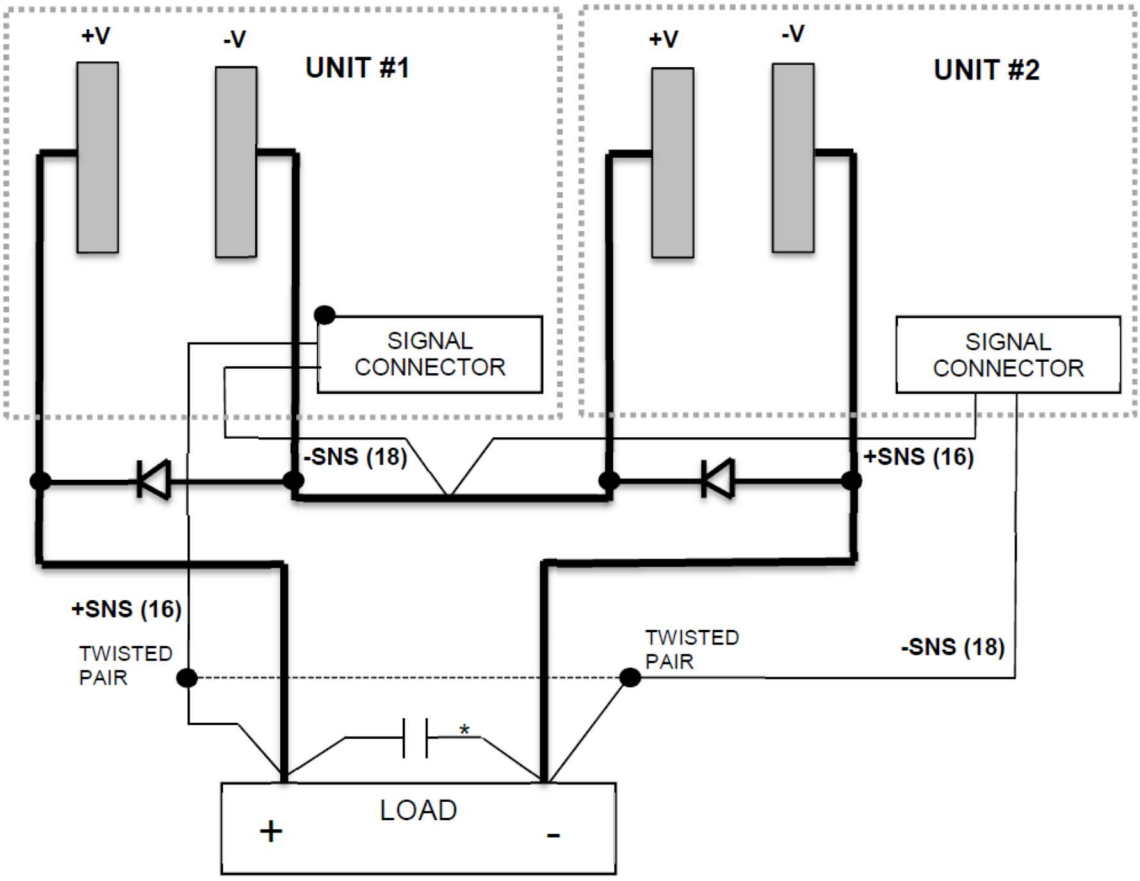

Figure 7: Series Operation (Remote Sensing)

*Suitable Decoupling Capacitor (0.1uF or higher) may be required at load.

Note: It is recommended that diodes rated a minimum of 50V be used for any TPS3000-24 units operated in series and diodes rated at a minimum of 100V be used for any TPS3000-48 units operated in series.

DO NOT CONNECT THE SENSE WIRES IN PARALLEL DURING SERIES OPERATION – THIS MAY RESULT IN DAMAGE TO THE POWER SUPPLY.

Ripple and Noise Notes

Ripple and Noise is measured according to the description below in accordance with JEITA RC-9131C (Sections 7.16, 7.17 and 7.18).
The measurement connection is shown in Fig. 3-1.
C1 (0.1µF Ceramic Capacitor), C2 (47uF Aluminum Electrolytic Capacitor) must be connected in parallel at 30cm from the output terminals, along the load cable. Attach a maximum 1.5m 50Ω coaxial cable from the ceramic capacitor electrodes to a filter attachment installed on the oscilloscope. The filter attachment consists of C3 (4700pF film capacitor) in series with R (50Ω resistor). Use 100MHz bandwidth oscilloscope or equivalent.

In general, output ripple voltage and output spike noise voltage can be reduced by increasing external capacitance.

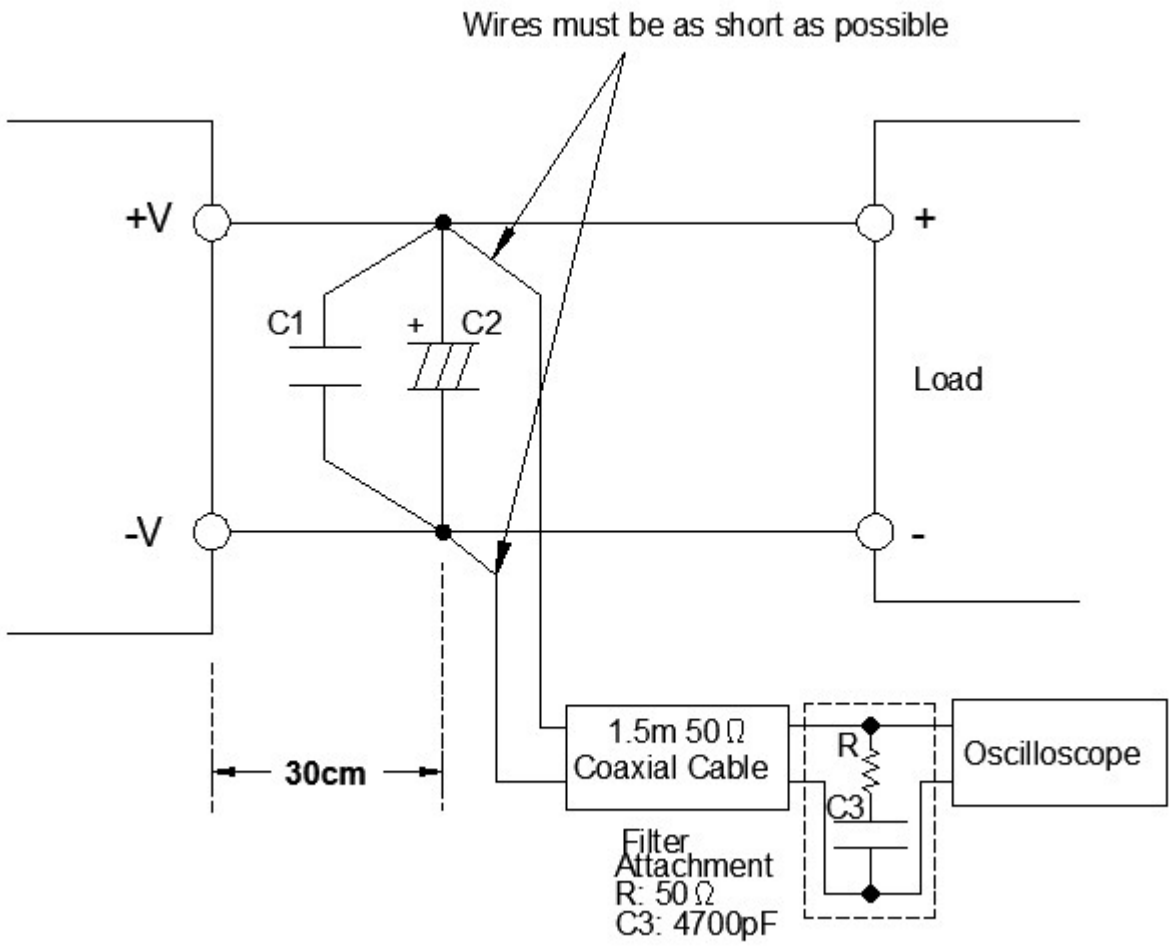

Figure 8: Output Ripple Voltage (including Spike Noise) Measurement Method

Mechanical Drawing

Overall dimensions for the TPS3000 series are shown below:

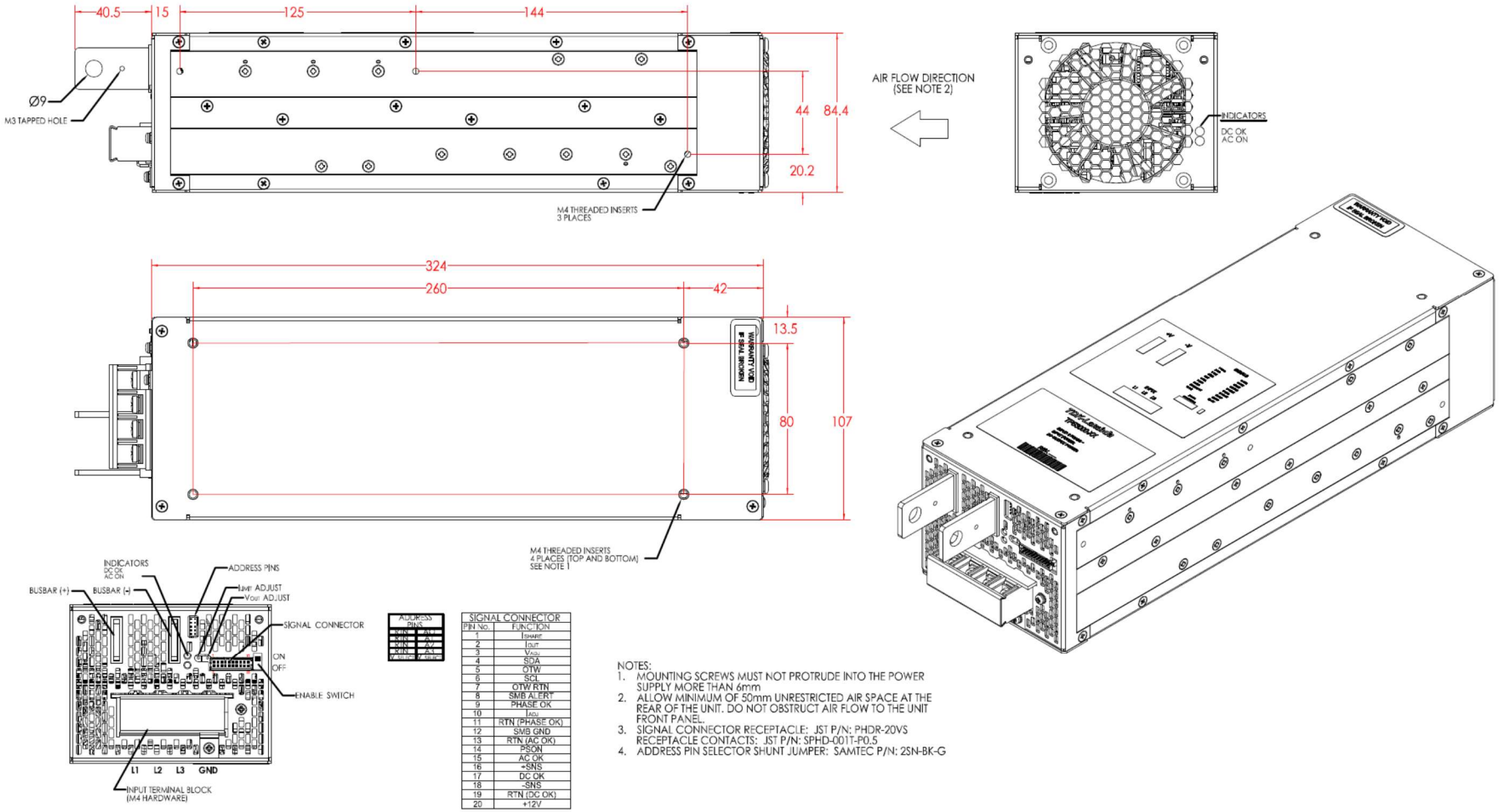

ADDRESS PINS	
PIN 1	A0
PIN 2	A1
PIN 3	A2
PIN 4	A3

SIGNAL CONNECTOR	
PIN No.	FUNCTION
1	ISHARE
2	IOUT
3	VOUT
4	SDA
5	OTW
6	SCL
7	OTW RTN
8	SMB ALERT
9	PHASE OK
10	IADJ
11	RTN (PHASE OK)
12	SMB GND
13	RTN (AC OK)
14	PSON
15	AC OK
16	+SNS
17	DC OK
18	-SNS
19	RTN (DC OK)
20	+12V

NOTES:
1. MOUNTING SCREWS MUST NOT PROTRUDE INTO THE POWER SUPPLY MORE THAN 6mm
2. ALLOW MINIMUM OF 50mm UNRESTRICTED AIR SPACE AT THE REAR OF THE UNIT. DO NOT OBSTRUCT AIR FLOW TO THE UNIT FRONT PANEL.
3. SIGNAL CONNECTOR RECEPTACLE: JST P/N: PHDR-20VS
   RECEPTACLE CONTACTS: JST P/N: SPHD-001T-P0.5
4. ADDRESS PIN SELECTOR SHUNT JUMPER: SAMTEC P/N: 2SN-BK-G

PMBus™ Interface

The TPS3000 has Power Management Bus (PMBus) hardware.
The PMBUS interface in the TPS3000 includes:

- Monitoring the Output Voltage (+/- 2% of Full Scale).
- Monitoring the Output Current (+/- 10% of Full Scale).
- Monitoring the Internal Temperature (Works on +40°C to 106°C range. Above 106°C the OTP activates and the monitor reads ~180°C) .
- Programming the Output Voltage (+/- 2% of Full Scale).
- Programming the Current Limit
- Programming the Supply ON/OFF.
- Reading and Clearing Faults.
- Reading the Manufacturing Related Data (Model Name, Serial No, Manufacturing Date, etc).

ATTENTION:
The PMBus supports:

- 100 KHz Operation.
- Block Read Protocol.
- Group Command Protocol.
- Direct Command Format for Monitoring and Programming
- Functions. Ver. 1.1 of PMBus Specifications.

ADDRESSING (A3, A2, A1, A0 inputs)

To communicate with the TPS3000, the master must first address the slave devices via a slave address byte. The slave address byte consists of seven address bits and a direction bit that indicates the intent to execute a read or write operation. The TPS3000 features four variable address lines that allow up to 16 Supplies to be connected on a single bus.

PMBus uses 7 bit addressing. There is constant part of address and variable part of address:

Constant part of address consists of 3 Most Significant Bits A6, A5, and A4 and always equals 010.

Variable part of address consists of 4 Least Significant bits: A3, A2, A1, and A0.

These four bits are assigned using the hardware connections of the PS address connector.

The Address lines (A3, A2, A1, and A0) are internally pulled up by resistors to +5V.

The address lines can be left open for ‹1› address or connected for ‹0› address.

The Address Space contains these 16 possible addresses:

A6	A5	A4	A3	A2	A1	A0	R/W Byte	Hex Address
0	1	0	0	0	0	0	x	40h
0	1	0	0	0	0	1	x	42h
0	1	0	0	0	1	0	x	44h
0	1	0	0	0	1	1	x	46h
0	1	0	0	1	0	0	x	48h
0	1	0	0	1	0	1	x	4Ah
0	1	0	0	1	1	0	x	4Ch
0	1	0	0	1	1	1	x	4Eh
0	1	0	1	0	0	0	x	50h
0	1	0	1	0	0	1	x	52h
0	1	0	1	0	1	0	x	54h
0	1	0	1	0	1	1	x	56h
0	1	0	1	1	0	0	x	58h
0	1	0	1	1	0	1	x	5Ah
0	1	0	1	1	1	0	x	5Ch
0	1	0	1	1	1	1	x	5Eh

In case more than one unit is connected to PMBus, each unit must be set to its own unique address. Duplicate addressing is not allowed.

Note: The TPS3000 is always considered a slave device.

SERIAL CLOCK (SCL)

This line is clocked by the Master which controls the PMBUS. It is connected to +5.0V or +3.3V (referenced to “SMB GND”) via a 5.0kΩ pull-up resistor.

SERIAL DATA (SDA)

This is a Bi-Directional line which is connected to +5.0V or +3.3V (referenced to "SMB GND") via a 5.0kΩ pull up resistor.

ALERT

ALERT is used to indicate to the HOST about any Faults/Error/Warning Conditions.

This line is connected to +5.0V or +3.3V(referenced to "SMB GND") via a 3.0kΩ pull up resistor.

This Signal is HIGH to indicate that no fault/error/warning is present. If some fault/error/warning occurs, the signal will go LOW.

The Host system must poll multiple supplies after receiving ALERT to retrieve fault/error/warning information.

Note: The TPS3000 does not respond to Alert Response Address.

PMBus COMMAND SET

READ_STATUS
This Command is used to read the status of the Power Supply. The Status information is stored in a special register called the "STATUS REGISTER"

The PMBus reads 16 different types of Faults and Warnings.

Command Used	Type	#Data bytes
D0h	Read	2

Fault is indicated by "1". No fault is indicated by"0".

Faults	Type	Bit # in Status Register	Meaning	Main output behavior
Low Byte				
DCOK	FAULT	0	Output Voltage < 85~95% of Set Vout	Output ON or OFF
		1		
OVP	FAULT	2	Output Voltage > 1.15xVset	Output OFF
OTP	FAULT	3	Internal temperature higher than safe limit	Output OFF
OTW	WARNING	4	Internal temperature ~ 10°C below OTP limit.	Output ON
FANOK*	WARNING	5	Fan is rotating slow	Output ON
ACOK	FAULT	6	Input Voltage <250Vac	Output OFF
IPOK*	WARNING	7	One Input Phase Low or Out	Output ON
High Byte				
		0		Output ON
IDR	WARNING	1	Invalid Data Byte Received	Output ON
IPM	WARNING	2	Invalid Programming Mode	Output ON
IOM	WARNING	3	Invalid Operating Mode	Output ON
I2C_BE	WARNING	4	Buss Error	Output ON
ICPDR	WARNING	5	Invalid Current Prog. Data Received	Output ON
IVPDR	WARNING	6	Invalid Voltage Prog. Data Received	Output ON
ICR	WARNING	7	Invalid Command Received	Output ON

For Example: If DC Status occurs, READ_STATUS will return 01h. ALERT will go "LOW"

*Note: There can be a delay of several seconds from the time the fault occurs and the time the status bit updates.

CLEAR_FAULTS

This command is used to clear the "STATUS REGISTER" after any fault occurs.
If the CLEAR_FAULTS command is not sent after any fault occurs, the "STATUS REGISTER" will not be cleared.
ALERT signal will remain "LOW" until a "CLEAR_FAULTS" command is sent.
If a Fault or Warning is still present after "CLEAR_FAULTS" is sent, "STATUS REGISTER" will be updated and the ALERT signal will be "LOW" again.

Command code	Type	#Data bytes
03h	Send Byte	0

OPERATION MODE

This command is used to set the way the user Enables/Disables the output of the Unit. Setting the Operation Mode to "*Remote Mode*" allows the user to control the output using the "*OPERATION ON*/OFF" command via the I2C. In the "*Local Mode*" the user has the option to use the Front Panel Output Enable Switch or the "PSON" pin on the Signals connector.

Command code	Type	Data sent
D8h	R/W Byte	00h=Remote
D8h	R/W Byte	80h=Local

When the user switches from "*Local Mode*" to "*Remote Mode*" for first time after applying AC power, the default Operation State will be "*Operation ON*". To keep the unit OFF when switching to "*Remote Mode"*, the "*Operation OFF"* command must be sent immediately after entering "*Remote Mode*".
If the user tries to change Operation State before the user changes Operation Mode to "*Remote Mode*" the unit will respond with error and will ignore the command.

OPERATION (ON/OFF)

If the Power Supply is turned OFF with the "*OPERATION OFF*" command, the Supply can be turned ON with the "*OPERATION ON*" command.

Command code	Type	Data sent
01h	R/W Byte	00h=OFF
01h	R/W Byte	80h=ON

After applying AC power to the unit the default control mode is the "*Local Mode*".
In this Mode the Front Panel Output Enable Switch will control the output state.

To turn ON or OFF the Unit in "*Remote Mode*" (I2C) do the following:
Set Operation Mode to "*Remote Mode*".
Then issue "*Operation ON*" to turn ON or "*Operation OFF*" to turn OFF the unit.

Once the user enters "*Remote Mode*" the Front Panel Output Enable Switch has no longer control of the Output until the user changes over to "*Local Mode*".

Attention: If the unit is ON and the user issues "*Operation OFF*" follow by "*Operation ON*" command within 3.0 Sec, the Unit will remain in the OFF state for 3.0 Sec from the time the user issue the "*Operation OFF*" command.
Also in *Local Mode* the Front Panel Output Enable Switch will behave in the same way. If the unit was enabled and the User disable it follow by Enable within 3.0 Sec, the Unit will remain in the OFF state for 3.0 Sec from the time the user disabled the unit.

When the user switches from "*Local Mode*" to "*Remote Mode*" for first time after applying AC power, the default Operation State will be "*Operation ON*". To keep the unit OFF when switching to "*Remote Mode"*, the "*Operation OFF"* command must be sent immediately after entering "*Remote Mode*".
If the user tries to change Operation State before the user changes Operation Mode to "*Remote Mode*" the unit will respond with error and will ignore the command.

COMMANDS TO READ INVENTORY DETAILS

Command Name	Command code	Type	#Data bytes
PMBUS_REVISION	98h	Read Byte	1
MFR_ID	99h	Read Block	10
MFR_MODEL	9Ah	Read Block	7
MFR_REVISION	9Bh	Read Block	11
MFR_LOCATION	9Ch	Read Block	3
MFR_DATE	9Dh	Read Block	8
MFR_SERIAL	9Eh	Read Block	20

All details except for ‹PMBUS_REVISION› are stored in ASCII format.

PROGRAMMING AND MONITORING FUNCTIONS

The following equation defines Direct Data format:

$$Y = (mX + b) * 10^{R} \qquad X = (Y * 10^{-R} - b)/m$$

Where **Y** - digital value sent or received from the supply.
X is the normal value (V, A, °C)
m, b, R - coefficients that are explained in Table 1.

Table 1

Voltage (V)	Physical value	Physical	Min. Value	Max. Value	m	b	R
48	Voltage Programming	V	38.4	58	70	-10	0
	Voltage monitoring	V	0	60	166	-47	-1
	Current Programming	A	44	66	74	-795	0
	Current monitoring	A	0	68	126	0	-1
	Temperature monitoring	°C	+40	150	21	5554	-1
24	Voltage Programming	V	19.2	29	138	-30	0
	Voltage monitoring	V	0	30	34	2	0
	Current Programming	A	88	134	35	-607	0
	Current monitoring	A	0	150	6281	0	-3
	Temperature monitoring	°C	+40	150	21	5554	-1

m, b, R coefficients can also be recovered from the EEPROM coefficients are stored in ASCII Format.

Command name	Command code	Type	#Data bytes
MFR_VOLTAGE_MON_COEFF	D3h	Read Block	18
MFR_VOLTAGE PROG_COEFF	D4h	Read Block	18
MFR_CURRENT_MON _COEFF	D5h	Read Block	18
MFR_CURRENT_PROG _COEFF	D6h	Read Block	18
MFR_TEMP_MON_COEFF	D7h	Read Block	18

MONITORING THE OUTPUT VOLTAGE (READ_VOUT)

The accuracy of the voltage reading is +/-2%
The output voltage is read before the ORING Circuit (~50mV Voltage drop @ load, no drop @no load). The read back Output Voltage can be calculated using the "Direct data Format".
Refer to Table 1 for the Coefficients for calculating the Output Voltage.

Command code	Type	#Data bytes
8Bh	Read Word	2

Example: TPS3000-24v.
Hex read back = 02FF h.
Converted to Decimal = 767.
Using the required coefficients the Output Voltage $(767*10^{-(-0)}-2)/34 = 22.50V$.
Add 0.05V to compensate ORing Circuit drop. So, the actual voltage is (Ex: 22.50 + 0.05 = 22.55V).
Read the Actual Output Voltage on the Output Bus Bar (Ex: 22.88V).

MONITORING THE OUTPUT CURRENT (READ_IOUT)

The accuracy of the current reading is +/-10%
The read back output current can be calculated using the "Direct data Format". Refer to **Table 1** for the Coefficients for calculating the Output Current.

Command Used	Type	#Data bytes
8Ch	Read Word	2

Example: TPS3000-24v.
Hex read back = 0359h.
Converted to Decimal = 857.
Using the required coefficients the output current = $((857 * 10^{-(-3)})-0)/6281 = 136.44A$;

MONITORING THE SUPPLY TEMPERATURE (READ_TEMPERATURE_1)

The read back supply temperature can be calculated using the "Direct data Format".
Please refer to **Table 1** for the Coefficients for calculating the Supply Temperature.

Command Used	Type	#Data bytes
8Dh	Read Word	2

Example:
Hex read back = 02FAh;
Converted to Decimal = 762;
Using the required coefficients the Supply Internal Temperature = $((762*10^{-(-1)})-5554))/21 = 98.38°C$;

PROGRAMMING MODE

This command is used to set the way the user adjusts the output of the Unit. Setting the Programming Mode to "*Remote*" allows the user to program the output voltage and current limit using the PMBus commands. In the "*Local*" the user has the option to use the Front Panel Vout ADJ trim pot or the "V_{adj}" pin on the Signals connector to adjust the output voltage and the I_{limit} ADJ trim pot to adjust the current limit point.

Command code	Type	Data sent
D2h	R/W Byte	00h=Remote
D2h	R/W Byte	80h=Local

PROGRAMMING THE OUTPUT VOLTAGE (VOUT_COMMAND)

The accuracy of the Output Voltage Programming is +/-2%
The output Voltage can be programmed using the "Direct data Format".
Please refer to table 1 for the Coefficients to be used for calculating the Voltage Programming.

Command Used	Type	#Data bytes
21h	R/W Word	2

Example: TPS3000-24.
To program the Output Voltage to 22.95V, send $(22.95x138+ (-30))*10^0 = 3137$ (DEC)
Converted to Hex = 0C41h;

PROGRAMMING THE OUTPUT CURRENT LIMIT (IOUT_COMMAND)

The accuracy of the Output Current Limit Programming is +/-2%
The output current Limit can be programmed using the "Direct data Format".
Please refer to table 1 for the Coefficients to be used for calculating the Voltage Programming.

Command Used	Type	#Data bytes
D1h	R/W Word	2

Example: TPS3000-24.
To program the Output Current Limit to 100A, send $(100x35+ (-607))*10^0 = 2893$ (DEC)
Converted to Hex = 0B4Dh;