2500W 1U Front End Power Supplies

https://product.tdk.com/en/power/hfe
www.emea.lambda.tdk.com/uk/products/hfe

Industrial COTS Test COMM Broadcast

The HFE2500 AC-DC industrial power supplies can be operated in a hot-swap redundant configuration, or used to provide up to 9,500W of bulk power. Up to four power supplies can be fitted in a variety of 19" 1U high racks, for configuration as a single output. The HFE supplies have internal ORing MOSFETs and current share for automatic parallel operation. Communication is possible with the power supplies using the optional isolated PMBus™ (I2C) interface or a plug-in LAN module. AC fail, DC good, remote output adjust, remote on/off and a 12V auxiliary output are fitted as standard.

Features	Benefits
• Internal ORing MOSFET and Current Share	• Suitable For N+1 Redundancy
• Up to 9500W in 1U Rack	• Utilizes Less System Space
• Full Array of Signals Available	• Easy Remote Monitoring
• PMBus™ (I^2C) and LAN options	• Industry Standard Communication Interfaces
• Analog Output Adjustment	• Simple External Resistance or Voltage Connection

Model Selector

Model	Output Voltage (V)	Adjustment Range (V)(1)	Max Current (A) (Vin>180Vac)	Max Power (W) (Vin>180Vac)	Max Current (A) (100<Vin<170Vac)(2)	Max Power (W) (100<Vin<170Vac)(2)
HFE2500-12	12	9.6 - 13.2	200	2400	125	1500
HFE2500-24	24	19.2 - 29	104	2496	62.5	1500
HFE2500-48	48	38.4V - 58	52	2496	31.25	1500

HFE2500-	12	/	S

Output voltage 12, 24, 48

blank	No PMBus™ / I^2C
S	PMBus™ / I^2C interface

Model Selector (Racks and LAN)

Model	Description	Maximum Rack Current
HFE2500-S1U	Four slot 19" rack, IEC320-C20 input connectors (4)	320A each side (640A total)
HFE2500-S1U-TB	Four slot 19" rack, Terminal Block input connectors (4)	320A each side (640A total)
HFE2500/BP	One slot blanking panel, three panels come with each rack	
HFE/C19-U-O	AC Power cord, 2.0m long, one per supply required	
HFE2500-LAN	Plug in LAN Module. Takes up one rack slot. For use with /S power supplies only.	

Specifications

Model		HFE2500-12	HFE2500-24	HFE2500-48
Input				
AC Input Voltage Range (Operating)(2)	Vac	85 - 265, See model selector for power derating		
Nominal Input Voltage Range	Vac	100 - 240 (Note: Safety certified for 90 - 264Vac only)		
Input Frequency	Hz	47 - 63		
Input Current (Max) 100/230Vac	A	15 / 12		
Inrush Current	A	<50		
Leakage Current 100/230Vac, 60Hz	mA	<0.75 / 1.5		
Power Factor Correction	-	Meets EN61000-3-2, PF > 0.98 at full load		
Harmonic Compliance	-	Meets IEC61000-3-2		
Hold-Up Time 115/230Vac, 60Hz	ms	>10, 80% loading		
Efficiency (3)	%	90 / 92	90 / 92	91 / 93
Conducted EMI	-	Designed to meet EN55032-B, FCC Class B, VCCI-B		
Radiated EMI	-	Designed to meet EN55032-A, FCC Class A, VCCI-A		
Immunity	-	See immunity section		
Safety Certifications and Markings	-	IEC/UL/CSA/EN62368-1, 60950-1, CE Mark and UKCA Mark		

Immunity

Test	Standard	Test Level	Criteria	Notes
ESD	EN61000-4-2	2,3	B	-
Radiated Susceptibility	EN61000-4-3	2	A	-
Electrical Fast Transient Burst	EN61000-4-4	2	B	-
Surge	EN61000-4-5	3,4	B	-
Conducted Susceptibility	EN61000-4-6	2	A	-
Magnetic fields	EN61000-4-8	4	A	-
Voltage Dips and Input Interruptions	EN61000-4-11	>95% for 0.5 cycles	B	-
		30% for 25/30 cycles	C	-
		>95% for 250/300 cycles	C	-

Specifications

Model		HFE2500-12	HFE2500-24	HFE2500-48
Output				
Line Regulation	mV	30	60	120
Load Regulation	mV	60	120	240
External Load Capacitance	uF	1000/A		
Ripple & Noise (1)	mV	240	240	480
Temperature Coefficient	%/°C	<0.02		
Minimum Load	-	No minimum load required		
Overcurrent Protection	%	105-115		
Overvoltage Protection (1)	%	110% (Tracking). Cycle AC to reset or utilize Remote On/Off		
Overtemperature Protection (1)	-	Shutdown with automatic reset. Warning signal provided		
Remote Sense Compensation	V/wire	0.25	0.5	1.0
Remote On/Off	-	Unit ON: 0-0.6V or short, OFF: 2-15V or open circuit		
Remote Adjust (1)	-	By either external 0-5V signal or 1k potentiometer		
AC Fail Signal	-	Open Collector, ON when AC is within 85-270Vac		
DC Good Signal	-	Open Collector, ON when output is above 85 to 95% of setpoint (tracking)		
Auxiliary Output	-	11.2 - 12.5V, 0.5A, 240mV ripple and noise		
Communication	-	Optional isolated PMBus™ (I2C) interface (/S suffix) or plug-in LAN module. See model selectors		
Indicators	-	AC OK: Green LED, DC OK / Fail: Green / Red LED		
Parallel Operation (1)	-	Yes, single wire current share, up to 95% accuracy (load dependent), up to 8 units		

Specifications

Model		HFE2500-12	HFE2500-24	HFE2500-48
Environmental				
Operating Temperature	°C	10 to +50: 100% load; +50 to +60 derate: 2%/˚C of load; +60 to +70 derate: 2.5%/˚C of load. For models with reverse air contact factory.		
Storage Temperature	°C	-30 to +85		
Humidity (non condensing)	%RH	Operating: 10 - 90, Storage: 10 - 95		
Cooling	-	Internal variable speed fans. Airflow enters from the front. (4)		
Altitude	m	3000 max. Derate output current 2%/100m above 2000m.		
Withstand Voltage	-	I/P to O/P 3kVac, I/P to GND 2kVac. O/P to GND: HFE2500-12, -24V 500Vac, HFE2500-48 2250Vdc 1 min, (POE)		
Isolation Resistance	MΩ	>100 at 25°C & 70%RH, Output to Ground 500Vdc		
Vibration (Non-operating))	-	Meets IEC60068-2-64 (Basic Transportation)		
Shock (Non-operating)	-	Meets IEC60068-2-27 (Basic Transportation)		
Other				
Weight (Typ)	g	Power Supply: 2100, Rack: 5000		
Size (LxWxH)	mm	Power supply: 325 x 107 x 40.1; Rack: 477.5 x 444.5 x 43.7		
Size (LxWxH)	Inches	Power Supply: 12.8 x 4.21 x 1.61; Rack: 15.8 x 17.5 x 1.72		
PMBus™ / I^2C Interface (1)	-	Isolated from output, Add suffix /S, PMBus™ compatible		
MTBF - Telcordia	Hours	219,557		
Warranty	yrs	Three		

Notes
(1) See installation manual for detailed specifications & test methods
(2) Derate linearly 1.3%/V from 100Vac to 85Vac input
(3) At 75% load, 100 / 230Vac input
(4) Reverse air - contact factory

Outline Drawing HFE2500

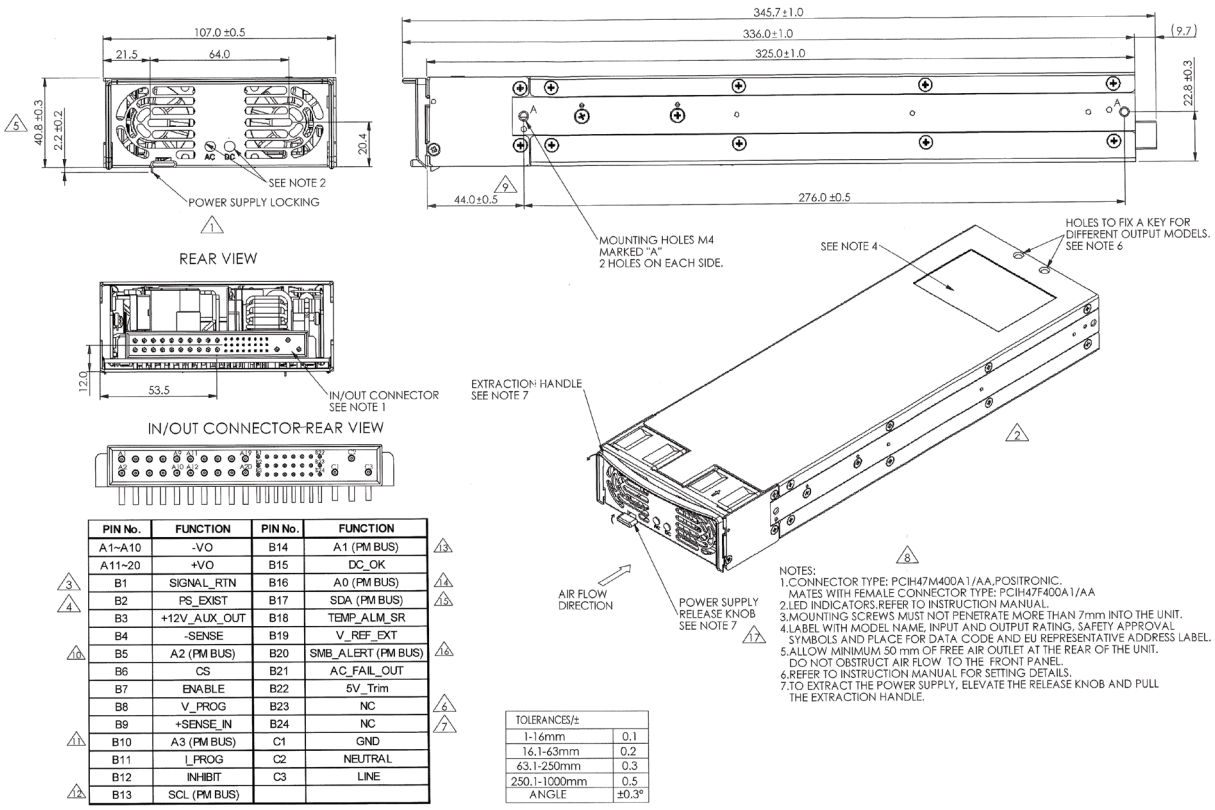

PIN No.	FUNCTION	PIN No.	FUNCTION
A1~A10	-VO	B14	A1 (PM BUS)
A11~20	+VO	B15	DC_OK
B1	SIGNAL_RTN	B16	A0 (PM BUS)
B2	PS_EXIST	B17	SDA (PM BUS)
B3	+12V_AUX_OUT	B18	TEMP_ALM_SR
B4	-SENSE	B19	V_REF_EXT
B5	A2 (PM BUS)	B20	SMB_ALERT (PM BUS)
B6	CS	B21	AC_FAIL_OUT
B7	ENABLE	B22	5V_Trim
B8	V_PROG	B23	NC
B9	+SENSE_IN	B24	NC
B10	A3 (PM BUS)	C1	GND
B11	I_PROG	C2	NEUTRAL
B12	INHIBIT	C3	LINE
B13	SCL (PM BUS)		

TOLERANCES/±	
1-16mm	0.1
16.1-63mm	0.2
63.1-250mm	0.3
250.1-1000mm	0.5
ANGLE	±0.3°

NOTES:
1.CONNECTOR TYPE: PCIH47M400A1/AA,POSITRONIC.
MATES WITH FEMALE CONNECTOR TYPE: PCIH47F400A1/AA
2.LED INDICATORS.REFER TO INSTRUCTION MANUAL.
3.MOUNTING SCREWS MUST NOT PENETRATE MORE THAN 7mm INTO THE UNIT.
4.LABEL WITH MODEL NAME, INPUT AND OUTPUT RATING, SAFETY APPROVAL SYMBOLS AND PLACE FOR DATA CODE AND EU REPRESENTATIVE ADDRESS LABEL.
5.ALLOW MINIMUM 50 mm OF FREE AIR OUTLET AT THE REAR OF THE UNIT. DO NOT OBSTRUCT AIR FLOW TO THE FRONT PANEL.
6.REFER TO INSTRUCTION MANUAL FOR SETTING DETAILS.
7.TO EXTRACT THE POWER SUPPLY, ELEVATE THE RELEASE KNOB AND PULL THE EXTRACTION HANDLE.

Outline Drawing HFE2500-S1U

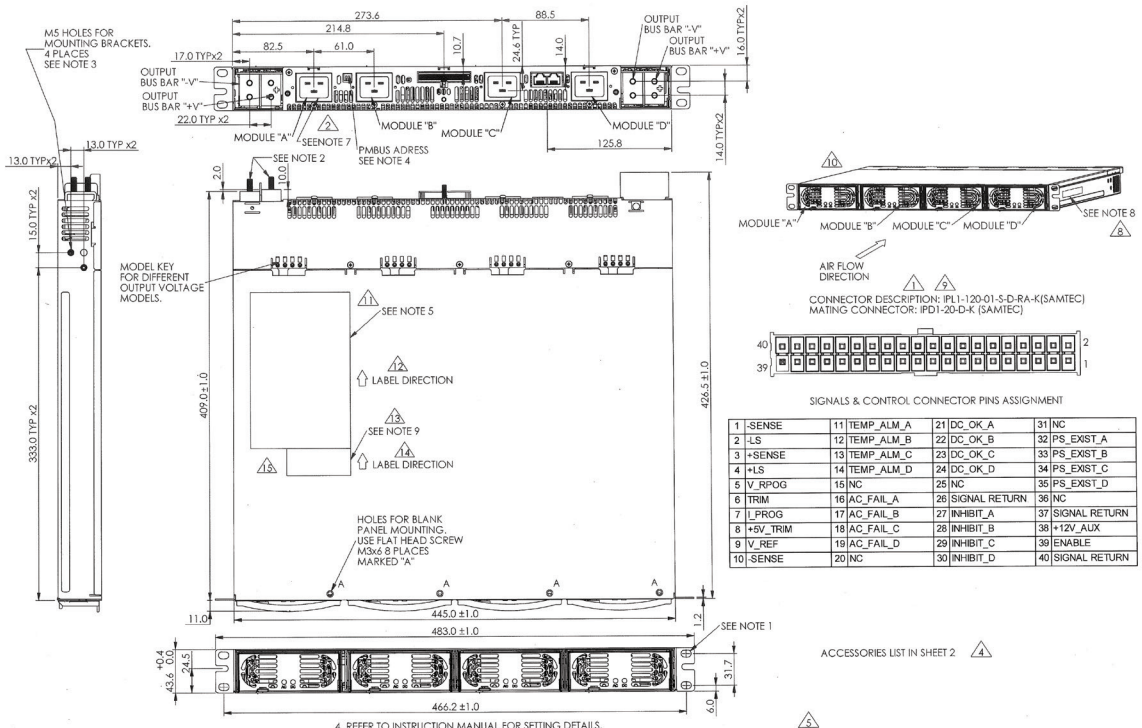

1	-SENSE	11	TEMP_ALM_A	21	DC_OK_A	31	NC
2	-LS	12	TEMP_ALM_B	22	DC_OK_B	32	PS_EXIST_A
3	+SENSE	13	TEMP_ALM_C	23	DC_OK_C	33	PS_EXIST_B
4	+LS	14	TEMP_ALM_D	24	DC_OK_D	34	PS_EXIST_C
5	V_RPOG	15	NC	25	NC	35	PS_EXIST_D
6	TRIM	16	AC_FAIL_A	26	SIGNAL RETURN	36	NC
7	I_PROG	17	AC_FAIL_B	27	INHIBIT_A	37	SIGNAL RETURN
8	+5V_TRIM	18	AC_FAIL_C	28	INHIBIT_B	38	+12V_AUX
9	V_REF	19	AC_FAIL_D	29	INHIBIT_C	39	ENABLE
10	-SENSE	20	NC	30	INHIBIT_D	40	SIGNAL RETURN

NOTES:
1. MOUNTING HOLES FOR RACK 19". USE M6x12 SCREWS TO FIX THE UNIT TO A RACK.
2. USE NUT,FLAT WASHER AND SPRING WASHER FOR LOAD WIRES FIXING. USE LUG STUD M6 FOR LOAD WIRES.RECOMMENDED TORQUE: 42-56 Kgf.cm.
3. TO FIX THE MOUNTING BRACKET TO THE CHASSIS USE M5x10 SEMS SCREWS .RECOMMENDED TIGHTENING TORQUE 27~31Kgf.cm. SCREWS MUST NOT PENETRATE THE CHASSIS MORE THAN 6.0 mm.
4. REFER TO INSTRUCTION MANUAL FOR SETTING DETAILS.
5. MODEL NAME, VOLTAGE AND CURRENT RATING AND SAFETY APPROVALS SYMBOLS WILL BE SHOWN HERE ACCORDING TO THE SPECIFICATION.
6. THE HFE-S1U RACK IS SHOWN WITH 4 HFE2500 UNITS INSTALLED.
7. THE IEC INLET - TYPE C20 .
8. EU REPRESENTATIVE ADDRESS LABEL.
9. IEC 60417-6042 AND IEC 60417-6172 SAFETY SYMBOLS LABELS.

Outline Drawing HFE2500-S1U-TB

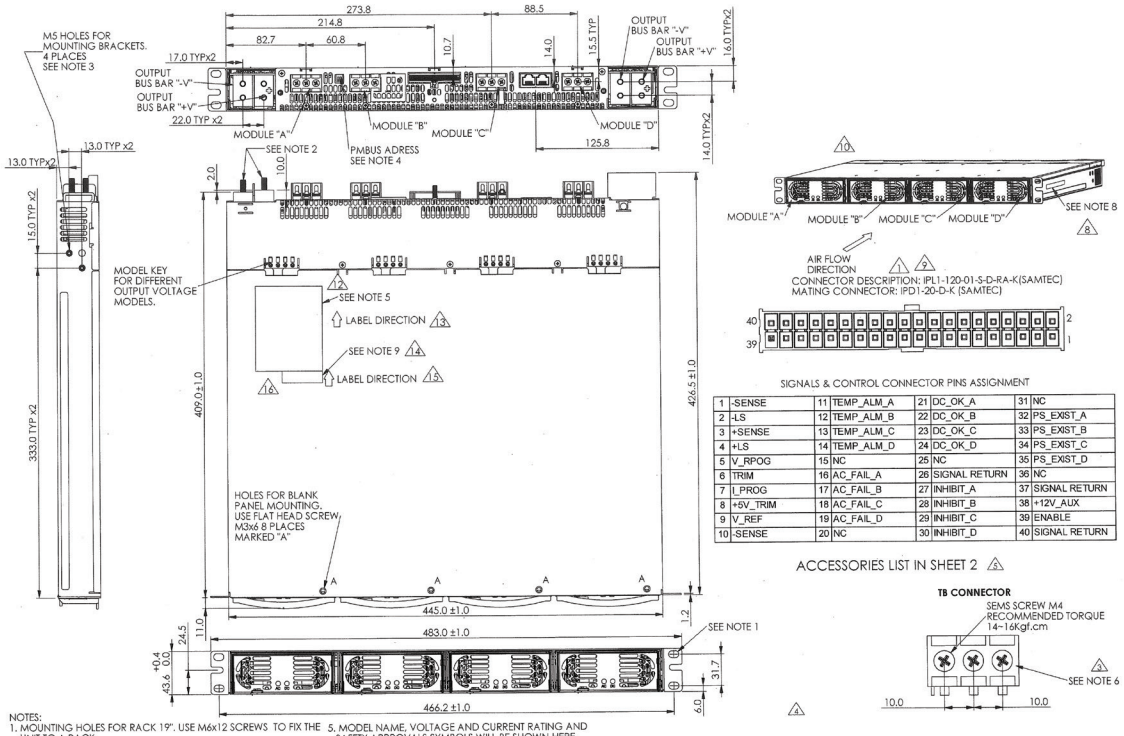

SIGNALS & CONTROL CONNECTOR PINS ASSIGNMENT

1	-SENSE	11	TEMP_ALM_A	21	DC_OK_A	31	NC
2	-LS	12	TEMP_ALM_B	22	DC_OK_B	32	PS_EXIST_A
3	+SENSE	13	TEMP_ALM_C	23	DC_OK_C	33	PS_EXIST_B
4	+LS	14	TEMP_ALM_D	24	DC_OK_D	34	PS_EXIST_C
5	V_RPOG	15	NC	25	NC	35	PS_EXIST_D
6	TRIM	16	AC_FAIL_A	26	SIGNAL RETURN	36	NC
7	I_PROG	17	AC_FAIL_B	27	INHIBIT_A	37	SIGNAL RETURN
8	+5V_TRIM	18	AC_FAIL_C	28	INHIBIT_B	38	+12V_AUX
9	V_REF	19	AC_FAIL_D	29	INHIBIT_C	39	ENABLE
10	-SENSE	20	NC	30	INHIBIT_D	40	SIGNAL RETURN

NOTES:
1. MOUNTING HOLES FOR RACK 19". USE M6x12 SCREWS TO FIX THE UNIT TO A RACK.
2. USE NUT,FLAT WASHER AND SPRING WASHER FOR LOAD WIRES FIXING . USE LUG STUD M6 FOR LOAD WIRES.RECOMMENDED TORQUE: 42-56 Kgf.cm.
3. TO FIX THE MOUNTING BRACKET TO THE CHASSIS USE M5x10 SEMS SCREWS .RECOMMENDED TIGHTENING TORQUE 27~31Kgf.cm. SCREWS MUST NOT PENETRATE THE CHASSIS MORE THAN 6.0 mm.
4. REFER TO INSTRUCTION MANUAL FOR SETTING DETAILS.
5. MODEL NAME, VOLTAGE AND CURRENT RATING AND SAFETY APPROVALS SYMBOLS WILL BE SHOWN HERE ACCORDING TO THE SPECIFICATION.
6. USE UL APPROVED INSULATED TERMINAL LUGS.
7. THE HFE-S1U RACK IS SHOWN WITH 4 HFE2500 UNITS INSTALLED.
8. EU REPRESENTATIVE ADDRESS LABEL.
9. IEC 60417-6042 AND IEC 60417-6172 SAFETY SYMBOLS LABELS

Outline Drawing HFE2500-LAN

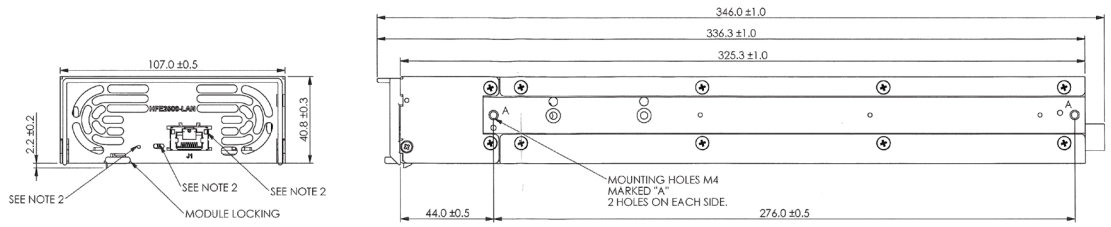

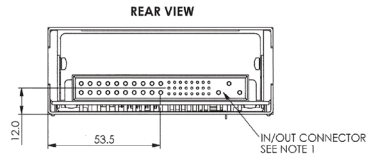

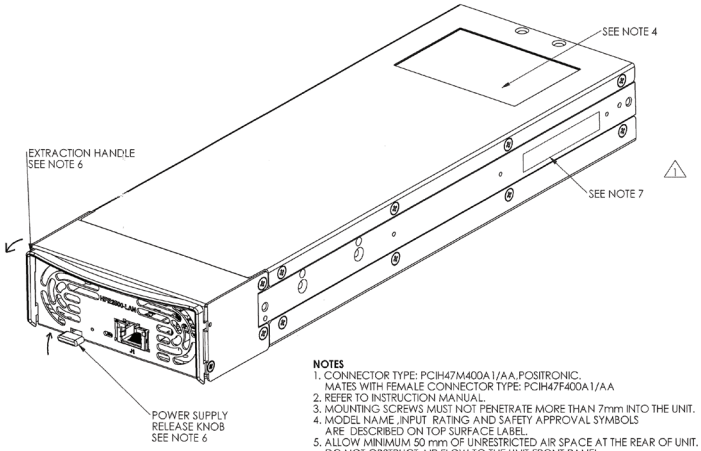

IN/OUT CONNECTOR REAR VIEW

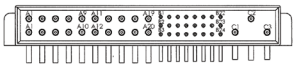

PIN No.	FUNCTION	PIN No.	FUNCTION
A1~A10	NC	B14	NC
A11~20	NC	B15	NC
B1	SIGNAL RETURN	B16	NC
B2	MODULE_EXIST	B17	SDA (SERIAL DATA)
B3	+12V_AUX_IN	B18	NC
B4	NC	B19	NC
B5	NC	B20	SMB_ALERT
B6	NC	B21	NC
B7	NC	B22	NC
B8	NC	B23	NC
B9	NC	B24	NC
B10	NC	C1	NC
B11	NC	C2	NC
B12	NC	C3	NC
B13	SCL (SERIAL CLOCK)		

TOLERANCES/±	
L≤16.0mm	0.1
16.0<L≤63.0mm	0.2
63.0<L≤250.0mm	0.3
250.0<L≤1000.0mm	0.5
1000< L	0.8
ANGLE	±0.5°

NOTES
1. CONNECTOR TYPE: PCIH47M400A1/AA.POSITRONIC. MATES WITH FEMALE CONNECTOR TYPE: PCIH47F400A1/AA
2. REFER TO INSTRUCTION MANUAL.
3. MOUNTING SCREWS MUST NOT PENETRATE MORE THAN 7mm INTO THE UNIT.
4. MODEL NAME ,INPUT RATING AND SAFETY APPROVAL SYMBOLS ARE DESCRIBED ON TOP SURFACE LABEL.
5. ALLOW MINIMUM 50 mm OF UNRESTRICTED AIR SPACE AT THE REAR OF UNIT. DO NOT OBSTRUCT AIR FLOW TO THE UNIT FRONT PANEL.
6. TO EXTRACT THE MODULE, ELEVATE AND HOLD THE RELEASE KNOB AND PULL THE EXTRACTION HANDLE.
7. EU REPRESENTATIVE ADDRESS LABEL.

TDK-Lambda France SAS
Tel: +33 1 60 12 71 65
tlf.fr.powersolutions@tdk.com
www.emea.lambda.tdk.com/fr

Italy Sales Office
Tel: +39 02 61 29 38 63
tlf.it.powersolutions@tdk.com
www.emea.lambda.tdk.com/it

Netherlands
tlf.nl.powersolutions@tdk.com
www.emea.lambda.tdk.com/nl

TDK-Lambda Germany GmbH
Tel: +49 7841 666 0
tlg.powersolutions@tdk.com
www.emea.lambda.tdk.com/de

Austria Sales Office
Tel: +43 2256 655 84
tlg.at.powersolutions@tdk.com
www.emea.lambda.tdk.com/at

Switzerland Sales Office
Tel: +41 44 850 53 53
tlg.ch.powersolutions@tdk.com
www.emea.lambda.tdk.com/ch

Nordic Sales Office
Tel: +45 8853 8086
tlg.dk.powersolutions@tdk.com
www.emea.lambda.tdk.com/dk

TDK-Lambda UK Ltd.
Tel: +44 (0) 12 71 85 66 66
tlu.powersolutions@tdk.com
www.emea.lambda.tdk.com/uk

TDK-Lambda Ltd.
Tel: +9 723 902 4333
tli.powersolutions@tdk.com
www.emea.lambda.tdk.com/il-en

TDK-Lambda Americas
Tel: +1 800-LAMBDA-4 or 1-800-526-2324
tla.powersolutions@tdk.com
www.us.lambda.tdk.com

TDK Electronics do Brasil Ltda
Tel: +55 11 3289-9599
sales.br@tdk-electronics.tdk.com
www.tdk-electronics.tdk.com/en

TDK-Lambda Corporation
Tel: +81-3-6778-1113
www.jp.lambda.tdk.com

TDK-Lambda (China) Electronics Co. Ltd.
Tel: +86 21 6485-0777
tlc.powersolutions@tdk.com
www.lambda.tdk.com.cn

TDK-Lambda Singapore Pte Ltd.
Tel: +65 6251 7211
tls.marketing@tdk.com
www.sg.lambda.tdk.com

TDK India Private Limited, Power Supply Division
Tel: +91 80 4039-0660
mathew.philip@tdk.com
www.sg.lambda.tdk.com

For Additional Information, please visit
https://product.tdk.com/en/power/