https://product.tdk.com/en/power/zbm
www.emea.lambda.tdk.com/zbm

12V, 15V and 24V 20A Buffer (Hold-Up) Modules

Industrial Test Semi-Fab COMM Broadcast

The ZBM20 20A buffer modules are ideal for providing short term hold-up or peak power for loads powered by 12V, 15V or 24Vdc output AC-DC power supplies. During normal operation, energy is stored in the ZBM20's electrolytic capacitors. When the AC power is interrupted for a short period of time, the ZBM20 continues to power the load, allowing equipment to shutdown in a safe and controlled manner. The ZBM20 can be set to fixed or variable buffer mode. In fixed mode it will provide power when the input voltage drops to below a preset level, in variable mode (24V model only) when the input decreases by 1V. Multiple buffer modules can be paralleled for additional hold-up time. Product status can be accessed remotely via a DC OK relay. The output voltage can also be inhibited to avoid an unsafe discharge of the stored energy.

Features	Benefits
• Provides 380ms Additional Hold-Up Time at Max Buffer Power	• Avoids Loss of Data During AC Power Interruptions
• Utilizes Electrolytic Capacitors to Store Energy	• No Batteries to Service or Maintain
• Five Year Warranty	• Lower Cost of Ownership
• Parallel Capable	• Hold-Up Time Can Be Extended
• Output Remote On/Off Function	• Avoids Unsafe Discharge of Stored Energy

Model Selector

Model	Output Voltage Fixed Mode (V) (1)	Output Voltage Dynamic Mode (V) (1)	Maximum Current (A)	Average Buffer Power (W)
ZBM20-12	11	-	20	220
ZBM20-15	13.8	-	20	276
ZBM20-24	22.4	Vin-1	20	448

Specifications

Model		ZBM20-12	ZBM20-15	ZBM20-24
Input				
Input Voltage range	Vdc	11.5 - 14.4	14.4 - 18	Fixed Mode: 23 - 30 Vin-1 Mode: 24 - 30
Input Current (Typical)	A	Charging Mode: 0.8, Ready Mode: 0.2		
Charging Time (Typical)	s	40		
Hold Up Time (Typical)	ms	380		
Conducted & Radiated EMI	-	EN55032-B CISPR32-B		
Immunity	-	See immunity table		
Safety Certifications and Markings	-	IEC/UL/CSA/EN62368-1, CE Mark and UKCA Mark		
Immunity				
Test	Standard	Test Level	Criteria	Notes
ESD	EN61000-4-2	4	A	15kV air, 8kV contact
Radiated Susceptibility	EN61000-4-3	3	A	
Electrical Fast Transient Burst	EN61000-4-4	1-3	A	Signal pin to FG Lvl 1
Surge	EN61000-4-5	1-2	A	Common mode only Lvl 2 Signal pin to FG Lvl 1
Conducted Susceptibility	EN61000-4-6	3	A	-
Output				
Buffer Voltage Tolerance (Load > 5%)	%	Fixed Mode: ±2, Dynamic Mode: +3 to -4 (24V model only)		
Switching Frequency (Typical)	kHz	Buck Converter: 100, Boost Converter: 65		
Ripple & Noise	mV	<160		<240
Minimum Load	-	No minimum load required		
Overcurrent Protection	%	>105 of buffer current		
Input Overvoltage Protection	-	Yes		
Overtemperature Protection	-	No		
Remote On/Off	-	Yes		
DC OK Relay	-	Photo MOS relay closed when DC is okay. (30V 0.2A)		
Status Signals	-	Photocoupled signals indicating fully charged and discharging modes		
Indicators	-	Green LED is off when bulk capacitor voltage is below ES1 level		
Parallel Operation	-	Possible, see installation manual		
Series Operation	-	Not possible		
Environmental				
Operating Temperature	°C	-25 to +70		
Storage Temperature	°C	-25 to +85		
Humidity (non condensing)	%RH	Operating: 30 - 90, storage: 10 - 90		
Cooling	-	Convection		
Altitude	m	5,000		
Withstand Voltage (For 1 minute)	Vac	Input and output to ground 500		
Isolation Resistance	MΩ	>100 at 25°C, 70%RH & 500VDC (input and output to ground)		
Vibration (Non Operating)	-	10 - 55Hz (sweep for 1 min) 19.6m/s^2 (constant X, Y, Z axis for 1 hour each)		
Shock	m/s^2	< 196.1		
Other				
Weight (Typ)	g	550		
Size (LxWxH)	mm	175 x 85 x 57		
Size (LxWxH)	Inches	6.89 x 3.35 x 2.24		
Connectors		CN1 & 2: JST B6P-VH, CN3: JST B6B-XH-A		
MTBF - Telcordia TR-332 issue 5 (25°C)	Hours	1,960,742		
Warranty	yrs	5		

Notes

See website for detailed specifications, test methods and installation manual

(1) ZBM20-24 Fixed and VIN-1 mode is switch selectable using SW1

Buffer Time Versus Buffer Current

ZBM20-12 :
Buffer time : 0 – 2 seconds

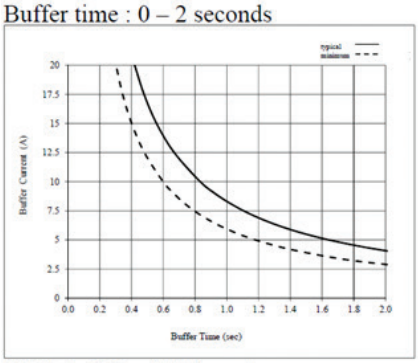

NOTE : Ta=25ºC and initial capacitance.

ZBM20-15 :
Buffer time : 0 – 2 seconds

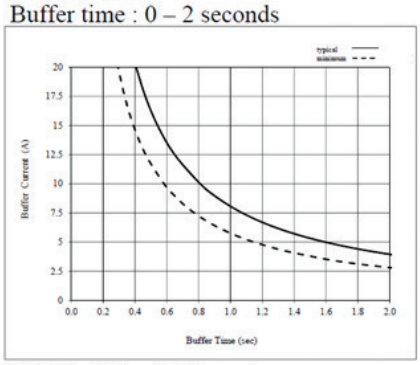

NOTE : Ta=25ºC and initial capacitance.

ZBM20-24 :
Buffer time : 0 – 2 seconds

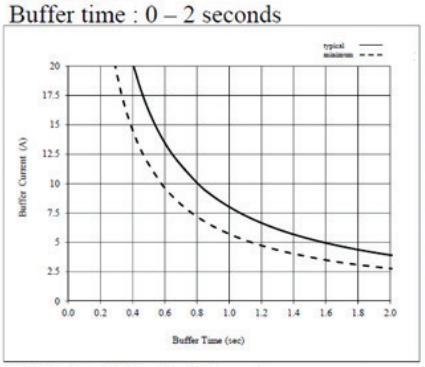

NOTE : Ta=25ºC and initial capacitance.

Block Diagram

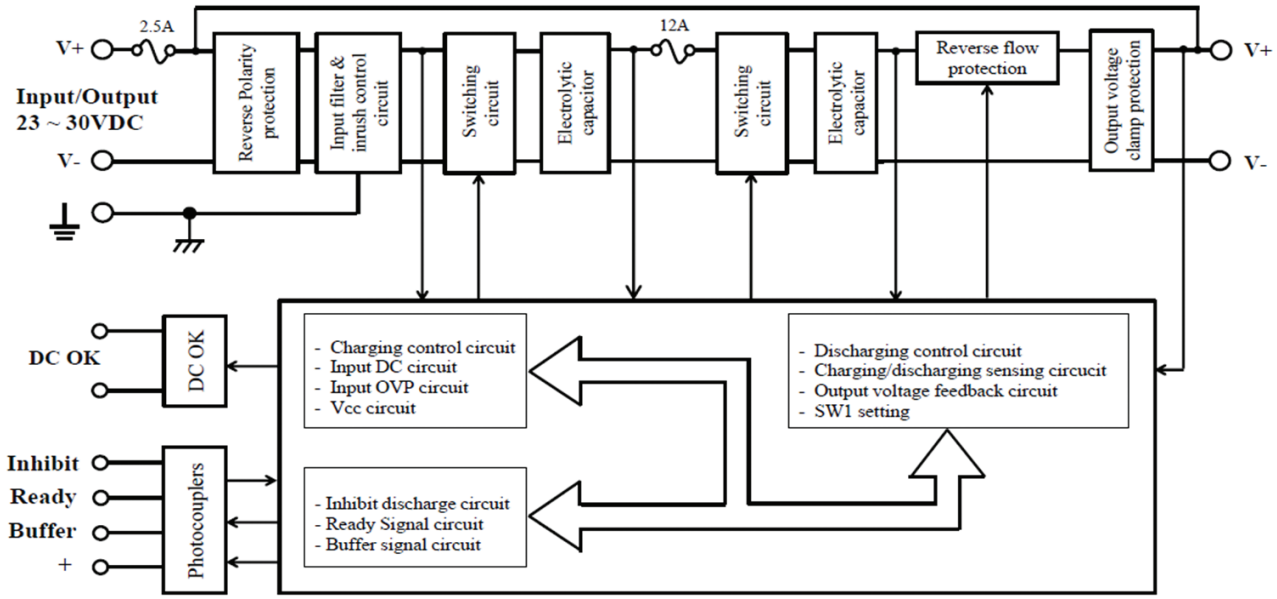

Timing Diagram

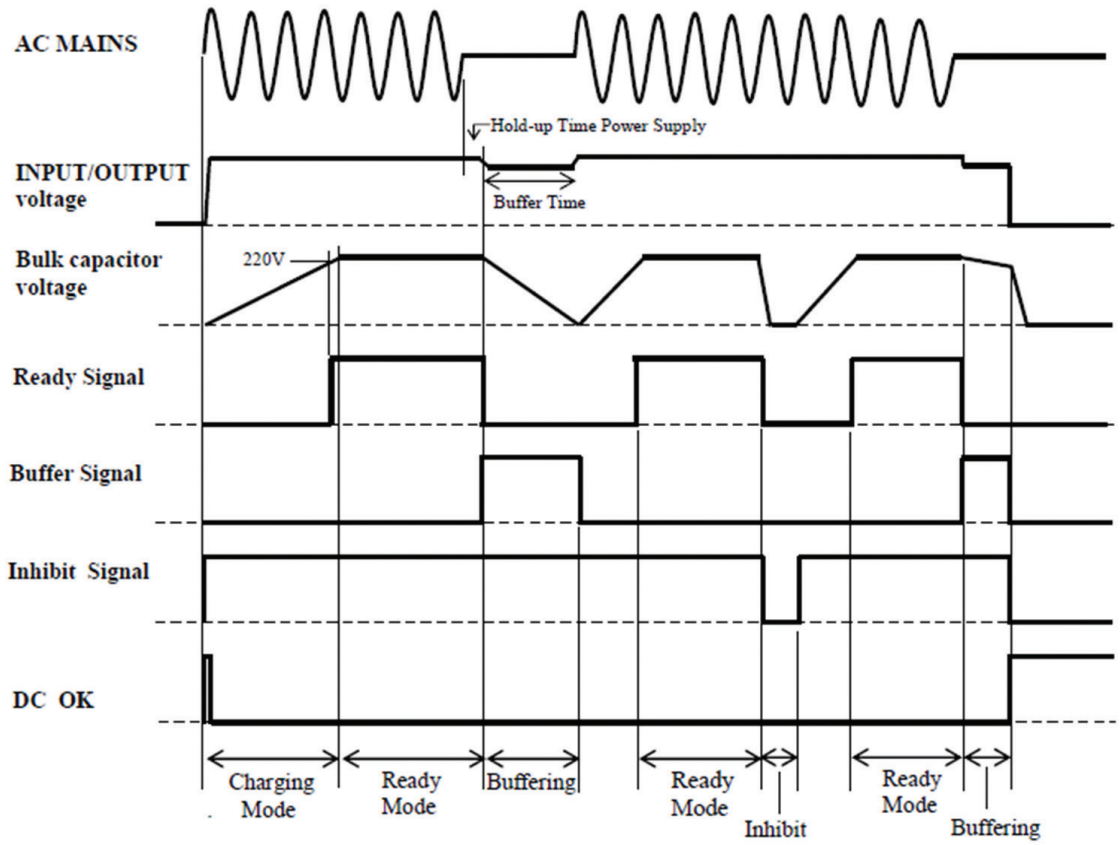

Mechanical Specification

Outline Drawing ZBM20

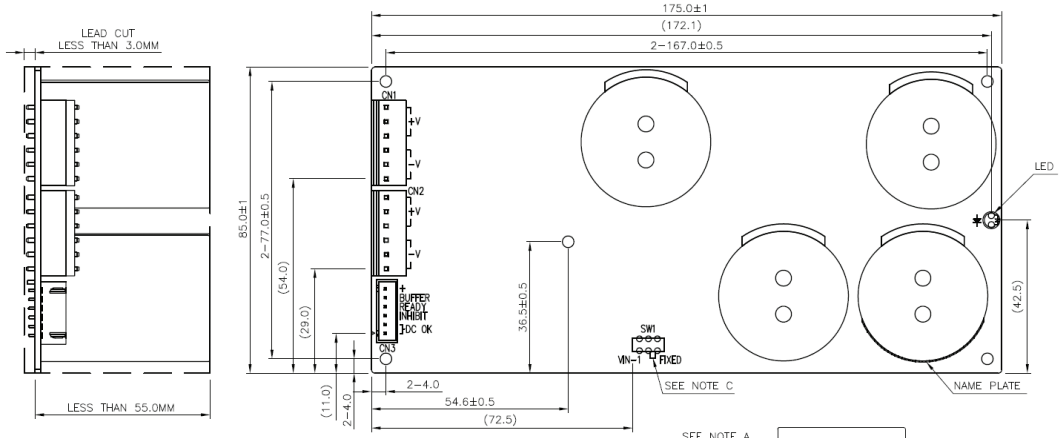

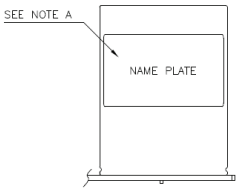

NAME PLATE PLACEMENT

CONNECTORS USED :

PART DESCRIPTION	PART NAME	MANUFACT.	QTY
PIN HEADER (CN1 & CN2)	B6P−VH(LF)(SN)	J.S.T.	2
PIN HEADER (CN3)	B6B−XH−A(LF)(SN)	J.S.T.	1

MATCHING HOUSINGS, PINS & TOOL (NOT INCLUDED WITH THE PRODUCT):

PART DESCRIPTION	PART NAME	MANUFACT.	QTY
SOCKET HOUSING (CN1 & CN2)	VHR−6N	J.S.T.	2
SOCKET HOUSING (CN3)	XHP−6	J.S.T.	1
TERMINAL PINS	SVH−41T−P1.1	J.S.T.	12
TERMINAL PINS	SXH−002T−P0.6	J.S.T.	6

NOTES

A. MODEL NAME, INPUT VOLTAGE RANGE, NOMINAL OUTPUT VOLTAGE, MAXIMUM OUTPUT CURRENT, BUFFER TIME, COUNTRY OF MANUFACTURE AND SAFETY MARKING (FOR ONLY APPROVED PRODUCTS) ARE SHOWN HERE IN ACCORDANCE WITH THE SPECIFICATIONS.

B. 5−ø3.2 HOLES ARE FOR CUSTOMER'S CHASSIS MOUNTING HOLE.

C. SWITCH IS SELECTED TO FIXED MODE BEFORE SHIPMENT. (SWITCH IS FOR 24V ONLY).

TDK-Lambda France SAS
Tel: +33 1 60 12 71 65
france@fr.tdk-lambda.com
www.emea.lambda.tdk.com/fr

Italy Sales Office
Tel: +39 02 61 29 38 63
info.italia@it.tdk-lambda.com
www.emea.lambda.tdk.com/it

Netherlands
info@nl.tdk-lambda.com
www.emea.lambda.tdk.com/nl

TDK-Lambda Germany GmbH
Tel: +49 7841 666 0
info@de.tdk-lambda.com
www.emea.lambda.tdk.com/de

Austria Sales Office
Tel: +43 2256 655 84
info@at.tdk-lambda.com
www.emea.lambda.tdk.com/at

Switzerland Sales Office
Tel: +41 44 850 53 53
info@ch.tdk-lambda.com
www.emea.lambda.tdk.com/ch

Nordic Sales Office
Tel: +45 8853 8086
info@dk.tdk-lambda.com
www.emea.lambda.tdk.com/dk

TDK-Lambda UK Ltd.
Tel: +44 (0) 12 71 85 66 66
info@uk.tdk-lambda.com
www.emea.lambda.tdk.com/uk

TDK-Lambda Ltd.
Tel: +9 723 902 4333
info@tdk-lambda.co.il
www.emea.lambda.tdk.com/il

C.I.S.
Commercial Support:
Tel: +7 (495) 665 2627
Technical Support:
Tel: +7 (812) 658 0463
info@tdk-lambda.ru
www.emea.lambda.tdk.com/ru

TDK-Lambda Americas
Tel: +1 800-LAMBDA-4 or 1-800-526-2324
powersolutions@us.tdk-lambda.com
www.us.lambda.tdk.com

TDK Electronics do Brasil Ltda
Tel: +55 11 3289-9599
sales.br@tdk-electronics.tdk.com
www.tdk-electronics.tdk.com/en

TDK-Lambda Corporation
Tel: +81-3-6778-1113
www.jp.lambda.tdk.com

TDK-Lambda (China) Electronics Co. Ltd.
Tel: +86 21 6485-0777
powersolutions@cn.tdk-lambda.com
www.lambda.tdk.com.cn

TDK-Lambda Singapore Pte Ltd.
Tel: +65 6251 7211
tls.mkt@sg.tdk-lambda.com
www.sg.lambda.tdk.com

TDK India Private Limited, Power Supply Division
Tel: +91 80 4039-0660
mathew.philip@in.tdk-lambda.com
www.sg.lambda.tdk.com

For Additional Information, please visit
https://product.tdk.com/en/power/