ENGLISH

General Safety Instructions:

READ SAFETY INSTRUCTIONS

Servicing:
These products are not customer serviceable. TDK-Lambda UK LTD. and their authorised agents only are permitted to carry out repairs.

Critical Components:
These products are not authorised for use as critical components in nuclear control systems, life support systems or equipment for use in hazardous environments without the express written approval of the Managing Director of TDK-Lambda EMEA.

Product Usage:
These products are designed for use within a host equipment which restricts access to authorised competent personnel.

This product is a component power supply and is only to be installed by qualified persons within other equipment and must not be operated as a stand alone product.
This product is for sale to business to business customers and can be obtained via distribution channels.
It is not intended for sale to end users.

This product is a component power supply and does not fall within the scope of the EMC directive. Compliance with the EMC directive must be considered in the final installation. Please contact your local TDK-Lambda office.

Environmental:
These products are IPX0, and therefore chemicals/solvents, cleaning agents and other liquids must not be used.

Environment:
This power supply is a switch mode power supply for use in applications within a Pollution Degree 2, overvoltage category II environment. Material Group IIIb PCB's are used within it.

Output Loading:
The output power taken from the power supply must not exceed the rating stated on the power supply label, except as stated in the product limitations in this instruction manual.

Input Parameters:
This product must be operated within the input parameters stated in the product limitations in this instruction manual.

End of Life Disposal:
The unit contains components that require special disposal. Make sure that the unit is properly disposed of at the end of its service life and in accordance with local regulations.

RISK OF ELECTRIC SHOCK

High Voltage Warning:
Dangerous voltages are present within the power supply. The professional installer must protect service personnel from inadvertent contact with these dangerous voltages in the end equipment.

WARNING: When installed in a Class I end equipment, this product must be reliably earthed and professionally installed.

The (+) or (-) output(s) can be earthed or left floating.

The mains input connector is not acceptable for use as field wiring terminals.

Do not use mounting screws, which penetrate the unit more than 4.5mm.

Special earthing screws are used on these products which connect the cover to the chassis. They must not be removed. If they are removed by mistake, they must be replaced with new ones and the product tested for earth bonding.

An internal fuse protects the unit and must not be replaced by the user. In case of internal defect, the unit must be returned to TDK-Lambda UK LTD or one of their authorised agents.

A suitable mechanical, electrical and fire enclosure must be provided by the end use equipment for mechanical, electric shock and fire hazard protection.

Energy Hazards:
Certain modules are capable of providing hazardous energy (240VA) according to output voltage setting. Final equipment manufacturers must provide protection to service personnel against inadvertent contact with these module output terminals. If set such that hazardous energy can occur then the module terminals or connections must not be user accessible.

HOT SURFACE

External Hot Surfaces:
In accordance with local regulations for Health and Safety at work, manufacturers have an obligation to protect service engineers as well as users. In order to comply with this, a label must be fitted to these products which is clearly visible to service personnel accessing the overall equipment, and which legibly warns that surfaces of these products may be hot and must not be touched when the products are in operation.

The ventilation openings on these products must not be impeded. Ensure that there is at least 50mm spacing between any obstruction and the ventilation openings.

The unit may be mounted in any orientation except inverted (mounted on its top) or vertical with the airflow downwards.

The unit cover/chassis is designed to protect skilled personnel from hazards. They must not be used as part of the external covers of any equipment where they may be accessible to operators, since under full load conditions, part or parts of the unit chassis may reach temperatures in excess of those considered safe for operator access.

On units with end fans and IEC 60320 connector, the fan and connector end of the unit is permitted to be user accessible. (Not for 60601-1 standards compliance).

DEUTSCH

Allgemeine Sicherheitsvorschriften:

LESEN SIE DIE SICHERHEITSVORSCHRIFTEN

Wartung:
Diese Produkte können nicht durch den Kunden gewartet werden. Nur TDK-Lambda UK LTD. und deren zugelassene Vertriebshändler sind zur Durchführung von Reparaturen berechtigt.

Kritische Komponenten:
Diese Produkte sind nicht für die Verwendung als kritische Komponenten in nuklearen Kontrollsystemen, Lebenserhaltungssystemen oder Geräten in gefährlichen Umgebungen geeignet, sofern dies nicht ausdrücklich und in Schriftform durch den Geschäftsführer von TDK-Lambda EMEA genehmigt wurde.

Produktverwendung:
Diese Produkte sind zur Verwendung innerhalb von Host-Anlagen gedacht, die einen auf das Fachpersonal beschränkten Zugang haben.

Dieses Produkt ist eine Stromversorgungs-Komponente und sie darf nur von qualifiziertem Personal in andere Geräte eingebaut werden und sie darf NICHT als eigenständiges ("Stand-Alone") Gerät betrieben werden.
Dieses Produkt ist für den Verkauf an Geschäftskunden entwickelt worden und es kann über Distributionskanäle bezogen werden.
Es ist NICHT für den Verkauf an Endkunden gedacht und konzipiert.

Dieses Produkt ist eine Stromversorgungsbaugruppe und sie fällt NICHT in den Bereich der EMV Direktive.
Die Konformität mit der EMV Richtlinie muss in der finalen Gesamtinstallation betrachtet werden.
Bitte kontaktieren Sie Ihr regionales TDK-Lambda Vertriebsbüro im Falle von Rückfragen.

Umwelt:
Diese Produkte sind IPX0, aus diesem Grund dürfen keine Chemikalien/Lösungsmittel, Reinigungsmittel und andere Flüssigkeiten verwendet werden.

Umgebung:
Dieses Netzteil ist ein Schaltnetzteil zur Verwendung in einer Umgebung mit einem Verschmutzungsgrad 2, Überspannungskategorie II. Materialgruppe IIIb mit darin verwendeten PCBs.

Ausgangsstrom:
Der Ausgangsstrom des Netzteiles darf die Leistung, die auf dem Label des Netzteiles vermerkt ist, nur dann überschreiten, wenn dies in den Produktgrenzen dieses Handbuches ausgezeichnet ist.

Eingangsparameter:
Dieses Produkt muss innerhalb der Eingangsparameter, die in den Produktgrenzen dieses Handbuches angegeben sind, betrieben werden.

Entsorgung am Ende der Betriebszeit:
Das Gerät enthält Komponenten die unter Sondermüll fallen. Das Gerät muss am Ende der Betriebszeit ordnungsgemäß und in Übereinstimmung mit den regionalen Bestimmungen entsorgt werden.

GEFAHR DURCH ELEKTRISCHEN SCHLAG

Hochspannungswarnung:
Innerhalb des Netzteiles gibt es gefährliche Spannungen. Der Elektroinstallateur muss das Wartungspersonal vor versehentlichem Kontakt mit den gefährlichen Spannungen im Endgerät schützen.

WARNUNG! Falls Sie unser Netzgerät in eine Anwendung mit Schutzklasse 1 eingebaut haben, stellen Sie sicher, dass es fachgerecht installiert und zuverlässig geerdet ist.

Die (+) oder (-) Ausgänge können geerdet werden oder unangeschlossen bleiben.

Der Haupteingangsanschluss ist nicht für die Verwendung als Feldverdrahtungsanschluss geeignet.

Verwenden Sie keine Befestigungsschrauben, die mehr als 4.5mm in das Gerät eindringen.

Zur Befestigung der Abdeckung am Gehäuse werden für diese Produkte spezielle Erdungsschrauben verwendet. Diese dürfen nicht entfernt werden. Sollten sie versehentlich entfernt werden, müssen sie durch neue ersetzt und das Produkt auf Erdschluss geprüft werden.

Eine interne Sicherung schützt das Gerät und darf durch den Benutzer nicht ausgetauscht werden. Im Fall von internen Defekten muss das Gerät an TDK-Lambda UK LTD oder einen der autorisierten Vertriebshändler zurückgeschickt werden.

Ein geeignetes mechanisches, elektrisches und brandgeschütztes Gehäuse muss als Schutz vor der Gefahr von mechanischen Risiken, Stromschlägen und Brandschutz in dem Endgerät vorgesehen werden.

Gefahren durch elektrische Energie:
Von bestimmten Modulen kann je nach Einstellung der Ausgangsspannung gefährliche elektrische Energie ausgehen (240 VA). Die Endgerätehersteller müssen einen Schutz für Servicepersonal vor unbeabsichtigtem Kontakt mit den Ausgangsanschlüssen dieser Module vorsehen. Kann aufgrund der Einstellung gefährliche elektrische Energie auftreten, dürfen die Modulanschlüsse für den Benutzer nicht zugänglich sein.

HEISSE OBERFLÄCHEN

Äußere heiße Oberflächen:
In Übereinstimmung mit den regionalen Bestimmungen für Gesundheit und Sicherheit bei der Arbeit ist der Hersteller für den Schutz von Wartungspersonal und Benutzern verantwortlich. Um diesen Bestimmungen gerecht zu werden, muss auf den Produkten ein Label angebracht werden, das deutlich sichtbar für das Wartungspersonal mit Zugriff auf die gesamte Anlage ist, und das gut lesbar auf die eventuell heiße Oberfläche des Gerätes hinweist und das Berühren des Produktes in Betrieb untersagt.

Die Belüftungsöffnungen an diesem Produkt dürfen nicht blockiert werden. Achten Sie darauf, dass mindestens 50 mm Abstand zwischen Hindernissen und den Belüftungsöffnungen bleibt.

Das Gerät darf in jeder Position befestigt werden, mit Ausnahme über Kopf (umgekehrt) oder vertikal mit dem Luftstrom abwärts.

Die Geräteabdeckung/das Gehäuse ist so entworfen, dass das Fachpersonal vor Gefahren geschützt wird. Sie dürfen nicht als Teil der externen Abdeckung für Geräte verwendet werden, die für den Betreiber zugänglich sein müssen, da Teile oder das gesamte Gerätegehäuse unter voller Auslastung übermäßige Temperaturen erreichen kann, die für den Zugang des Betreibers nicht mehr als sicher betrachtet werden.

An Geräten mit Endlüftern und IEC 60320 Anschluss, kann das Ende des Gerätes, in dem der Lüfter und der Anschluss untergebracht sind, für den Benutzer zugänglich sein.

FRANÇAIS

Consignes générales de sécurité:

LIRE LES CONSIGNES DE SECURITE

Entretien:
Ces produits ne peuvent pas être réparés par l'utilisateur. Seuls, TDK-Lambda UK LTD et ses agents agréés sont autorisés à effectuer des réparations.

Composants critiques:
Ces produits ne doivent pas être utilisés en tant que composants critiques dans des systèmes de commande nucléaire, dans des systèmes de sauvetage ou dans des équipements utilisés dans des environnements dangereux, sans l'autorisation écrite expresse du directeur général de TDK-Lambda EMEA.

Utilisation du produit:
Ces produits sont conçus pour être utilisés dans un équipement hôte dont l'accès n'est autorisé qu'aux personnes compétentes.

Ce produit est une alimentation considérée comme un composant devant être installé par des personnes qualifiées, dans un autre équipement. Il ne doit pas être utilisé en tant que produit fini.
Ce produit est destiné à la vente entre entreprises et peut être obtenu via des canaux de distribution.
Il n'est pas prévu à la vente pour les particuliers.

Ce produit est une alimentation considérée comme un composant, il ne relève pas du champ d'application de la directive CEM. Le respect de la directive CEM doit être pris en compte dans l'installation finale. Veuillez contacter votre bureau TDK-Lambda le plus proche.

Environnement:
Ces produits sont IPX0, et donc on ne doit pas utiliser des produits chimiques/solvants, des produits de nettoyage et d'autres liquides.

Environnement fonctionnel:
Cette alimentation fonctionne en mode commutation pour utilisation dans des applications fonctionnant dans un environnement avec Degré de Pollution 2 et catégorie de surtension II. Elle utilise des cartes des circuits imprimés (PCB) de Groupe IIIb.

Intensité soutirée:
L'intensité soutirée de l'alimentation ne doit pas dépasser l'intensité nominale marquée sur la plaque signalétique, sauf indications contraires dans les limitations du produit décrit dans ce manuel.

Paramètres d'entrée:
Ce produit doit être utilisé à l'intérieur des paramètres d'entrée indiqués dans les limitations du produit dans ce manuel.

Elimination en fin de vie:
L'alimentation contient des composants nécessitant des dispositions spéciales pour leur élimination. Vérifiez que cette alimentation est mise au rebut correctement en fin de vie utile et conformément aux réglementations locales en vigueur.

RISQUE DE CHOC ELECTRIQUE

Attention-Danger haute tension:
Des tensions dangereuses sont présentes dans l'alimentation. L'installateur doit protéger le personnel d'entretien contre un contact involontaire avec ces tensions dangereuses dans l'équipement final.

AVERTISSEMENT: Si ce produit est installé dans un équipement final de classe I, il doit être mis à la terre de manière fiable et installé par un professionnel averti.

Les sorties (+) ou (-) peuvent être raccordées à la terre ou laissées flotttantes.

Le connecteur d'entrée d'alimentation principale ne doit pas être utilisé comme borne de raccordement.

N'utilisez pas de vis pénétrant dans le module sur une profondeur supérieure à 4.5 mm.

Des vis de terre spéciales sont utilisées sur ces produits pour raccorder le couvercle au châssis. Elles ne doivent pas être enlevées. Si elles sont enlevées par erreur, elles doivent être remplacées et le produit doit être testé pour vérifier que le raccordement à la terre est correct.

Un fusible interne protège le module et ne doit pas être remplacé par l'utilisateur. En cas de défaut interne, le module doit être renvoyé à TDK-Lambda UK LTD ou l'un de ses agents agréés.

Une enceinte appropriée doit être prévue par l'utilisateur final pour assurer la protection contre les chocs mécaniques, les chocs électriques et l'incendie.

Energies dangereuses :
Certains modules peuvent générer une énergie dangereuse (240 VA) selon le réglage de tension de sortie. Le fabricant de l'équipement final doit assurer la protection des techniciens d'entretien contre un contact involontaire avec les bornes de sortie de ces modules. Si une telle tension dangereuse risque de se produire, les bornes ou les connexions du module ne doivent pas être accessibles par l'utilisateur.

SURFACE CHAUDE

Surfaces chaudes extérieures:
Conformément aux réglementations locales concernant la santé et la sécurité sur les lieux de travail, les fabricants doivent protéger les techniciens d'entretien et les utilisateurs. Pour cela, une plaque signalétique doit être installée sur ces produits, et cette plaque doit être bien visible pour les techniciens d'entretien intervenant sur l'équipement, et elle doit indiquer de manière bien visible que les surfaces de ces produits peuvent être chaudes et qu'elles ne doivent pas être touchées lorsque les produits fonctionnent.

Le module peut être monté suivant une orientation quelconque, sauf en position inversée (monté sur son sommet) ou en position verticale avec écoulement d'air descendant.

Les orifices de ventilation sur ces produits ne doivent pas être obstrués. Vérifiez qu'il y a un espace libre d'au moins 50 mm entre une obstruction et les orifices de ventilation.

Le couvercle et le châssis du module sont conçus pour protéger des personnels expérimentés. Ils ne doivent pas être utilisés comme couvercles extérieurs d'un équipement, accessible aux opérateurs car en condition de puissance maximum, des parties du châssis peuvent atteindre des températures considérées comme dangereuses pour l'opérateur.

Sur les modules avec ventilateurs d'extrémité et connecteur IEC 60320, le ventilateur et le connecteur sont accessibles pour l'utilisateur.

ITALIANO

Norme generali di sicurezza:

SI PREGA DI LEGGERE LE NORME DI SICUREZZA

Manutenzione:
Il cliente non può eseguire alcuna manutenzione su questi prodotti. L'esecuzione delle eventuali riparazioni è consentita solo a TDK-Lambda UK LTD e ai suoi agenti autorizzati.

Componenti critici:
Non si autorizza l'uso di questi prodotti come componenti critici all'interno di sistemi di controllo nucleari, sistemi necessari alla sopravvivenza o apparecchiature destinate all'impiego in ambienti pericolosi, senza l'esplicita approvazione scritta dell'Amministratore Delegato di TDK-Lambda EMEA.

Uso dei prodotti:
Questi prodotti sono progettati per l'uso all'interno di un'apparecchiatura ospite che limiti l'accesso al solo personale competente e autorizzato.

Questo prodotto è da considerarsi come un alimentatore professionale componente e come tale deve essere installato da personale qualificato all'interno di altre apparecchiature e non può essere utilizzato come prodotto indipendente.
Questo prodotto non è inteso per la vendita al dettaglio o agli utilizzatori finali.

Questo alimentatore è da considerarsi come un componente e come tale non è assogettato dagli scopi della direttiva EMC. Conformità alla direttiva EMC deve essere considerata nell'installazione finale di utilizzo. Gli uffici di TDK-Lambda Sas Succursale Italiana sono a vostra disposizione per ulteriori ragguagli.

Condizioni ambientali:
Questi prodotti sono classificati come IPX0, dunque non devono essere utilizzati sostanze chimiche/solventi, prodotti per la pulizia o liquidi di altra natura.

Ambiente:
Questo prodotto è un alimentatore a commutazione, destinato all'uso in applicazioni rientranti in ambienti con le seguenti caratteristiche: Livello inquinamento 2, Categoria sovratensione II. Questo prodotto contiene schede di circuiti stampati in materiali di Gruppo IIIb.

Carico in uscita:
La potenza in uscita ottenuta dall'alimentatore non deve superare la potenza nominale indicata sulla targhetta dell'alimentatore, fatto salvo dove indicato nei limiti per i prodotto specificati in questo manuale.

Parametri di alimentazione:
Questo prodotto deve essere utilizzato entro i parametri di alimentazione indicati nei limiti per il prodotto, specificati in questo manuale.

Smaltimento:
L'unità contiene componenti che richiedono procedure speciali di smaltimento. Accertarsi che l'unità venga smaltita in modo corretto al termine della vita utile e nel rispetto delle normative locali.

RISCHIO DI SCOSSA ELETTRICA

Avvertimento di alta tensione:
All'interno dell'alimentatore sono presenti tensioni pericolose. Gli installatori professionali devono proteggere il personale di manutenzione dal rischio di contatto accidentale con queste tensioni pericolose all'interno dell'apparecchiatura finale.

ATTENZIONE: Se installato in un’attrezzatura di classe I, questo prodotto deve essere collegato a terra in modo affidabile ed installato in modo professionale.

Le uscite (+) o (-) possono essere messa a terra o lasciate isolate.

Il connettore dell'alimentazione principale non può essere utilizzato come terminale di collegamento di campo.

Non utilizzare viti che penetrano nell'unità per più di 4.5 mm.

Per questi prodotti vengono usate viti speciali di messa a terra, che collegano il coperchio al telaio. Tali viti non devono essere rimosse. Se le viti vengono tolte per errore, vanno sostituite con nuove viti ed occorre testare il prodotto per verificarne il collegamento a massa.

Un fusibile interno protegge l'unità e non deve essere sostituito dall'utente. Nell'eventualità di un difetto interno, restituire l'unità a TDK-Lambda UK LTD o a uno dei suoi agenti autorizzati.

L'apparecchiatura finale deve includere una recinzione meccanica, elettrica e antincendio per proteggere dai pericoli di natura meccanica, dalle scosse elettriche e dai pericoli di incendio.

Pericoli energetici:
Alcuni moduli sono in grado di erogare energia pericolosa (240 VA) a seconda della tensione in uscita impostata. I produttori delle apparecchiature finali sono tenuti a proteggere il personale di manutenzione dal rischio di contatto accidentale con questi terminali dei moduli di uscita. Se impostati su livelli che non escludono l'erogazione di energia pericolosa, questi terminali o collegamenti non devono risultare accessibili da parte dell'utente.

SUPERFICIE CALDA

Superfici esterne calde:
Coerentemente con le norme locali in materia di salute & sicurezza professionali, i produttori sono tenuti a salvaguardare i tecnici di manutenzione, e inoltre gli utenti. Per far fronte a tali obblighi, i prodotti devono presentare una targhetta, chiaramente visibile al personale di manutenzione che accede all'apparecchiatura nel complesso e che risulti inoltre leggibile e avverta gli addetti del rischio che le superfici di questi prodotti possono scottare e non vanno toccate con i prodotti in funzione.

L'unità può essere installata in qualunque orientamento, ma non in posizione capovolta o in posizione verticale con il flusso dell'aria rivolto verso il basso.

Le griglie di ventilazione su questi prodotti non devono essere ostruite. Verificare che vi sia una distanza minima di 50 mm fra le griglie di ventilazione e qualsiasi eventuale ostruzione.

Il coperchio/telaio dell'unità è realizzato per proteggere il personale esperto dai pericoli. Non deve essere usato come parte degli involucri esterni di qualsiasi apparecchiatura, se risulta accessibile da parte degli addetti, poiché è possibile che in condizioni di pieno carico una o più parti del telaio dell'unità giunga/giungano a temperature superiori ai limiti considerati sicuri per l'accesso da parte degli addetti.

Sulle unità provviste di ventole terminali e di connettori a norma IEC 60320, è possibile consentire all'utente accesso al lato della ventola e del connettore dell'unità.

ESPAÑOL

Instrucciones generales de seguridad:

LEA LAS INSTRUCCIONES DE SEGURIDAD

Servicio:
Estos productos no pueden ser reparados por los clientes. TDK-Lambda UK LTD. y sus agentes autorizados son los únicos que pueden llevar a cabo las reparaciones.

Componentes fundamentales:
Estos productos no pueden ser utilizados como componentes fundamentales en sistemas de control nuclear, sistemas de soporte vital o equipos a utilizar en entornos peligrosos sin el consentimiento expreso por escrito del Director General de TDK-Lambda EMEA.

Uso de los productos:
Estos productos han sido diseñados para ser utilizados en un equipo central que restrinja el acceso al personal cualificado autorizado.

Este producto es una fuente de alimentación y sólo puede ser instalado por personal cualificado dentro de otros equipos y no debe ser tratado como un producto independiente. Este producto debe ser vendido entre empresas profesionales y solo puede obtenerse a través de los canales de distribución .No está destinado para la venta a usuarios finales

Este producto es una fuente de alimentación y no se ve afectada por la directiva EMC . El cumplimiento de la directiva EMC se debe considerar en la instalación final . Por favor, póngase en contacto con su oficina local de TDK - Lambda

Medioambiental:
Estos productos son IPX0 y, por tanto, no pueden utilizarse sustancias químicas/disolventes, agentes de limpieza ni otros líquidos.

Medio ambiente:
Esta fuente de alimentación es una fuente de alimentación de modo conmutado a utilizar en aplicaciones dentro de un entorno con un Grado de contaminación 2 y una Categoría de sobretensión II. En él se utilizan policloruros de bifenilo del Grupo de materiales IIIb.

Carga de salida:
La potencia de salida tomada de la fuente de alimentación no puede sobrepasar el valor nominal indicado en la etiqueta de la fuente de alimentación, excepto en los casos indicados en las limitaciones del producto en este manual.

Parámetros de entrada:
Este producto debe ser utilizado dentro de los parámetros de entrada indicados en las limitaciones del producto en este manual.

Desecho de la unidad:
La unidad contiene componentes que deben ser desechados de una manera especial. Asegúrese de desechar correctamente la unidad al final de su vida útil y conforme a las normas locales vigentes.

PELIGRO DE DESCARGAS ELÉCTRICAS

Advertencia de alta tensión:

En esta fuente de alimentación hay tensiones peligrosas. El instalador profesional debe proteger al personal de servicio contra cualquier contacto accidental con estas tensiones peligrosas en el equipo final.

ADVERTENCIA: La instalación de este producto en un equipo de clase I la deben llevar a cabo profesionales y el producto debe estar conectado a tierra.

La salida o salidas (+) o (-) pueden conectarse a tierra o se las puede dejar flotando.

El conector de entrada de la red no es apto para ser utilizado a modo de bornes de cableado de campo.

No utilice tornillos de montaje susceptibles de penetrar en la unidad más de 4.5 mm.

Con estos productos se utilizan unos tornillos de puesta a tierra especiales que conectan la cubierta al chasis. No se deben quitar en ningún caso. En caso de quitarlos por error, hay que reemplazarlos por unos nuevos y comprobar la conexión a tierra del producto.

Un fusible interno protege la unidad y este no debe ser nunca reemplazado por el usuario. En caso de existir algún defecto interno, la unidad debe ser enviada a TDK-Lambda UK LTD o a uno de sus agentes autorizados.

El equipo de uso final debe constituir un recinto de protección mecánica, eléctrica y contra incendios de protección mecánica, contra descargas eléctricas y contra el peligro de incendios.

Peligros de energía:
Algunos módulos pueden generar energía peligrosa (240VA) dependiendo de la configuración de la tensión de salida. Los fabricantes de equipos finales deben proteger al personal de servicio contra un contacto accidental con estos bornes de salida de los módulos. Si se configura de modo que pueda generarse energía peligrosa, hay que evitar que el usuario pueda acceder a los bornes o conexiones del módulo.

SUPERFICIE CALIENTE

Superficies externas calientes:
Según las normas locales relativas a la Salud y Seguridad en el trabajo, los fabricantes están obligados a proteger a los ingenieros de servicio además de a los usuarios. Para que esto se cumpla, debe colocarse una etiqueta en estos productos que pueda ser vista claramente por el personal de servicio que accede al equipo general, y con advertencias legibles de que las superficies de estos productos pueden estar calientes y no deben tocarse cuando los productos se encuentran en funcionamiento.

La unidad se puede montar en cualquier orientación excepto invertida (montada sobre su parte de arriba) o vertical con los orificios para el flujo de aire mirando hacia abajo.

Las aberturas de ventilación de estos productos no deben obstruirse jamás. Asegúrese de que quede una separación de 50 mm por lo menos entre cualquier obstrucción y las aberturas de ventilación.

La cubierta/chasis de la unidad ha sido diseñada para que proteja a las personas cualificadas de los peligros. No deben ser utilizadas como parte de las cubiertas externas de cualquier equipo al que pueden acceder los operarios, ya que bajo unas condiciones de carga completa, la pieza o piezas del chasis de la unidad pueden alcanzar temperaturas superiores a las consideradas seguras para el acceso de los operarios.

En las unidades con ventiladores y un conector IEC 60320 finales, se debe permitir el acceso al usuario al extremo de la unidad donde se encuentra el ventilador y el conector.

PORTUGUÊS

Instruções gerais de segurança:

LEIA AS INSTRUÇÕES DE SEGURANÇA

Manutenção:
Estes produtos não são podem ser submetidos a manutenção por parte do cliente. Apenas a TDK-Lambda UK LTD e os seus agentes autorizados têm permissão para realizar reparações.

Componentes essenciais:
Não é autorizada a utilização destes produtos como componentes essenciais de sistemas de controlo nuclear, sistemas de suporte de vida ou equipamento para utilização em ambientes perigosos sem a expressa autorização por escrito do Director-Geral da TDK-Lambda EMEA.

Utilização do produto:
Estes produtos foram concebidos para utilização dentro de um equipamento de alojamento que apenas permita o acesso a pessoal qualificado autorizado.

Este produto é uma alimentaçao considerado com um componente para ser instalado por pessoas qualificadas, em outros equipamentos. Não deve ser usado como um produto acabado.
Este produto é destinado para venda entre as empresas e pode ser obtido através de canais de distribuição.
Não se destina à venda aos particulares

Este produto é uma alimentaçao considerado com um componente, não é dentro do appliquation âmbito da directiva CEM.
Conformidade com a directiva CEM devem ser considerados na instalação final.
Entre em contacto com seu escritório TDK-Lambda mais próximo.

Ambiental:
Estes produtos são IPX0 e, como tal, não se devem utilizar químicos/solventes, agentes de limpeza e outros líquidos.

Ambiente:
Esta fonte de alimentação é uma fonte de alimentação do modo de comutação para utilização em aplicações com um Nível de Poluição 2 e ambientes da categoria de sobretensão II. São utilizadas placas de circuitos impressos do grupo de materiais IIIb.

Carga de saída:
A potência de saída extraída da fonte de alimentação não deve exceder a classificação assinalada na etiqueta da fonte de alimentação, excepto quando indicado nas limitações do produto neste guia.

Parâmetros de entrada:
Este produto deve ser utilizado dentro dos parâmetros de entrada indicados nas limitações do produto neste guia.

Eliminação no fim de vida:
A unidade contém componentes que necessitam de procedimentos especiais de eliminação. Certifique-se de que a unidade é devidamente eliminada no fim da sua vida útil e que tal é feito em conformidade com os regulamentos locais.

RISCO DE CHOQUE ELÉCTRICO

Aviso de alta tensão:
Estão presentes tensões perigosas dentro da fonte de alimentação. O profissional que realizar a instalação deve proteger o pessoal de assistência contra contactos inadvertidos com estas tensões perigosas do equipamento final.

AVISO: Quando instalado num equipamento de Classe I, este produto deve ser ligado à terra de forma fiável e instalado por um profissional.

As saídas (+) e (-) podem ser ligadas à terra ou deixadas soltas.

O conector de entrada de alimentação não deve ser utilizado como terminal de cablagens no local.

Não utilize parafusos de montagem, uma vez que estes penetrarão na unidade em mais do que 4.5 mm.

Nestes produtos utilizam-se parafusos especiais de ligação à terra, que ligam a cobertura ao chassis. Não devem ser removidos. Se forem removidos por engano, deverão ser substituídos por parafusos novos, devendo-se testar a ligação à terra do produto.

Existe um fusível interno que protege a unidade e que não deve ser substituído pelo utilizador. Em caso de defeito interno, a unidade deve ser devolvida à TDK-Lambda UK LTD ou a um dos seus agentes autorizados.

O equipamento de utilização final deve fornecer um bastidor com protecção mecânica, eléctrica e contra incêndios adequada.

Perigos de energia:
Alguns módulos tem a capacidade de fornecer energia perigosa (240 VA), de acordo com a configuração da tensão de saída. O equipamento final do fabricante deve garantir que o pessoal de assistência está protegido contra contactos inadvertidos com estes terminais de saída do módulo. Se essa energia perigosa for produzida, as ligações e os terminais do módulo não devem ser acessíveis pelos utilizadores.

SUPERFÍCIE QUENTE

Superfícies quentes externas:
Segundo com os regulamentos locais sobre saúde e segurança no local de trabalho, os fabricantes têm a obrigação de proteger os técnicos de manutenção, bem como os utilizadores. De forma a respeitar este regulamento, estes produtos deverão ter uma etiqueta que seja facilmente visível ao pessoal de assistência que aceda ao equipamento em geral, e que alerte, de forma legível, para o facto de as superfícies destes produtos poderem estar quentes, não devendo ser tocadas quando os produtos estão em funcionamento.

A unidade pode ser instalada em qualquer posição, excepto invertida (montada sobre a parte superior), ou na posição vertical, com o fluxo de ar dirigindo-se para baixo.

As aberturas de ventilação destes produtos não devem ser obstruídas. Certifique-se de que existe um espaçamento de pelo menos 50 mm entre qualquer obstrução e as aberturas de ventilação.

O chassis/cobertura da unidade está concebido de forma a proteger o pessoal especializado de perigos. Não devem ser utilizados como parte das coberturas externas de qualquer equipamento em que possam estar acessíveis aos operadores, uma vez que em condições de carga máxima, algumas peças do chassis da unidade podem atingir temperaturas superiores às consideradas seguras para o acesso do operador.

Em unidades com ventiladores finais e conectores IEC 60320, o lado do ventilador e do conector da unidade pode estar acessível ao utilizador.

Special Instructions for medical applications of the following standards:
IEC/EN 60601-1 2nd Edition +A1 + A2
UL 60601-1, 1st Edition
CAN/CSA-C22.2 No. 601.1-M90
IEC/EN 60601-1 3rd Edition + A1
ANSI/AAMI ES 60601-1
CSA 22.2 No 60601-1

These products are designed for continuous operation within an overall enclosure, and must be mounted such that access to the mains terminals is restricted. See the appropriate standard listed above.

These products are NOT suitable for use in the presence of flammable anaesthetic mixtures with air or with oxygen, or with nitrous oxide.

For IEC/EN60601-1 2nd Edition + A1 + A2, UL60601 1st Edition, CAN/CSA-C22.2 No. 601-M90, the NV350 range provides the following levels of insulation: For PSU's fitted with C and/or CM Modules only there is Reinforced insulation between input and outputs. For all other PSU's there is a basic insulation between input and outputs. For PSU's fitted wiith CM Modules only, there is basic insulation at the working voltage between the CM module outputs and earth (provided that a CM module is not fitted in slot 1).

For IEC/EN 60601-1 3rd Edition + A1, ANSI/AAMI ES 60601-1, CSA 22.2 No. 60601-1, the NV350 range provides reinforced insulation between input and outputs (2 MOOPs) for all products. For PSU's fitted wiith CM Modules only, there is basic insulation at the working voltage between the CM module outputs and earth (1 MOPP) (provided that a CM module is not fitted in slot 1). For PSU's fitted with C and CM modules there are two MOPPs from input to output at 4000 meters only.

Connect only apparatus complying with the standards listed above as appropriate to the signal ports.

All outputs are SELV except possibly when they are connected in series and depending on the total voltage.

These products are classed as ordinary equipment and are not protected against the ingress of water (IPX0).

Reference should be made to local regulations concerning the disposal of these products at the end of their useful life.

Where any part of this product is made accessible to the operator in the end use equipment, the operator must not touch this part and the patient at the same time.

These products have not been assessed to IEC/EN60601-1-2 (EMC) but EMC test data is available from TDK-Lambda UK Ltd.

WARNING: No modification of this product is allowed.
Except for permanently installed equipment, the overall equipment into which these products are installed must have double pole fusing on the input mains supply. The products themselves have single pole fusing in the live line only.

Special Instructions for IEC/EN/UL/CSA 61010-1

Whilst all individual module single outputs are classed as SELV outputs in accordance with IEC/EN/60950 (<60Vdc or 42.4V peak) series combinations of these modules may exceed these values and become hazardous output voltages. For IEC/EN61010-1 the equivalent limits are 70Vdc, 33Vrms or 46.7V peak. Provided these levels are not exceeded, the outputs are not considered hazardous for IEC/EN61010-1.

If the equipment is used in a manner not specified by the manufacturer, the protection provided by the equipment may be impaired.

If the earth terminal of the NV350 PSU is connected to the main incoming earth conductor of the end equipment, the installer must cover the NV350 earth symbol with a label bearing the earth symbol of IEC60417-5019.

Special instructions for IEC/EN/UL/CSA 62368-1

Outputs that may have been previously SELV (in accordance with 60950, 61010) need to be reconsidered as Energy Sources 1, 2 and 3 under 62368-1. Please refer to the Energy Source Classification Table of this document and the safety file for further guidance.

Environmental Specifications:

Description	Operation	Storage
Use	Indoor	-
Temperature	0°C - +65°C (derating above 45°C or 50°C – See Cooling Options)	-40°C - +70°C
Humidity	5 - 95% RH, non-condensing	5 - 95% RH, non-condensing
Altitude	-200m - 5000m*	-200m - 5000m
Pressure	54kPa - 106kPa	54kPa - 106kPa
Orientation	Horizontal with chassis lowest, on either side or vertical with the airflow upwards.	All
Material Group	IIIb	
Pollution Degree	2	
Description	**Operation**	**Storage**
Overvoltage Category	II	
Class	I	
Weight	1 Kg (Dependent on configuration)	
IP Rating	IPX0	

* - 5000m for 62368, 60950-1 and 60601-1 Edition 3 only, 3000m for other standards applicable.

Level of Insulation:
Primary mains circuits to earth: 2.25 – 2.35Kvdc.
Primary mains circuits to secondary and earth: 4.25 - 4.35kVDC**.
Primary mains circuits to transformer core: 4.25 - 4.35kVDC**.
Outputs to each other and to earth are isolated to 200VDC except CM modules which are 730 – 760Vdc to earth.
** This test is not possible with Y capacitors fitted to the unit as damage to RFI capacitors may occur.

Safety Approvals:
UL60950-1 and CSA22.2 No.60950-1 - UL Recognised. C-UL for Canada.
UL62368-1 and CSA22.2 No.62368-1 - UL Recognised. C-UL for Canada
IEC / EN62368-1 - CE and UKCA mark.
IEC/EN60950-1, IEC/EN 62368-1, IEC/EN 61010-1 and IEC/EN60601-1 - CB Report and Certificate.
CE marking when applied to any NV350 product indicates compliance with the Low Voltage Directive in that it complies with EN62368-1 and with the RoHS Directive.
UKCA marking when applied to any NV350 product indicates compliance with the Electrical Equipment (Safety) Regulations 2016 in that it complies with EN62368-1 and with the Restriction of the Use of Certain Hazardous Substances in Electrical and Electronic Equipment Regulations 2012
UL/CSA 61010-1: UL + C–UL approval
UL/CSA 60601-1/ANSI/AAMI ES 60601-1 - UL + C -UL approval

Fuse: Internal fuse (F1): 6.3A/250V fast acting HBC, 5x20mm.

Symbols:

AC

EARTH

N – Neutral

L – Live

If the earth terminal of the NV350 PSU is connected to the main incoming earth conductor of the end equipment, the installer must cover the earth symbol with a label bearing the earth symbol of IEC60417-5019.

Note: All output voltages/variants may not be available as standard units, refer to datasheet for standard product range. These (and other variants) may be available as non-standard or custom units. Please contact our sales team for details.

PRODUCTS COVERED

Unit Configuration Code:

NV350 or NV3 or NV-350 (these models are identical)

followed by: S, R, Q, P, V, C, U or K where:

Option Letter	Airflow Option
S	Forward airflow, standard fan
R	Reverse airflow, standard fan
Q	Forward airflow, quiet fan
P	Reverse airflow, quiet fan
V	Forward airflow, temperature controlled fan
C	Customer air, fan not fitted
T	Forward airflow, top fan
U	Customer air, fan not fitted, cover not fitted
K	Custom fan/chassis assembly
L	Fixed speed fan (Non-standards only)

followed by: S or I, where:

Option Letter	Input Option
S	Screw input terminals
I	IEC input

followed by: S, M, L, R, or T, where:

Option Letter	Leakage Option
S	Standard Leakage (Class B Filter)
M	Medium Leakage
L	Low Leakage
R	Reduced Leakage
T	Tiny Leakage

Unit configuration may be given using the above code and/or by the option description. The input terminal type (screw or IEC) may alternatively be determined by examination of the unit.

optionally followed by: EN#V, EN12V, EN13.5V, IN#V, IN12V, IN13.5V, ES#V, ES12V, ES13.5V, IS#V, IS12V or IS13.5V. Where:

Option Letter	Global Option
EN#V	AC good, global module good, PSU enable, 5-5.5V, 2A standby output
EN12V	AC good, global module good, PSU enable, 12V, 1A standby output
EN13.5V	AC good, global module good, PSU enable, 13.5V, 1A standby output
IN#V	AC good, global module good, PSU inhibit, 5-5.5V, 2A standby output
IN12V	AC good, global module good, PSU inhibit, 12V, 1A standby output
IN13.5V	AC good, global module good, PSU inhibit, 13.5V, 1A standby output
ES#V	AC good, PSU enable, 5-5.5V, 2A standby output
ES12V	AC good, PSU enable, 12V, 1A standby output
ES13.5V	AC good, PSU enable, 13.5V, 1A standby output
IS#V	AC good, PSU inhibit, 5-5.5V, 2A standby output
IS12V	AC good, PSU inhibit, 12V, 1A standby output
IS13.5V	AC good, PSU inhibit, 13.5V, 1A standby output

Where: # represents the standby output voltage and is in the range 5 to 5.5.

The Global Options Inhibit and Enable functions permit the customer to turn off or on the main PSUs outputs and the fan. The standby supply is for use by the customer and provides an SELV output that continues to operate when all the main PSUs outputs have been turned off using the Inhibit or Enable functions. All the functions of the Global Option pass through a single 8 way PWB socket and are all rated SELV.

NV350 Modules:

Up to 3 of the following modules types may be fitted:

@B
or @BH
or @C
or @CM

where @ is the output voltage of the module and is within the range given in the single output module table.

or @/#DB (Where / can be replaced with _)

where @ is the output voltage of channel 1 and # is the output voltage of channel 2 of the module. Voltages are within the range given in the DB module tables.

or @/#DA (Where / can be replaced with _)

where @ is the output voltage of channel 1 and # is the output voltage of channel 2 of the module. Voltages are within the range given in the DA module tables. Only 1 DA module may be fitted.

or B/S

where B/S indicates that a blanking plate is fitted in place of a module.

The following nomenclature may optionally be used for outputs connected in series:
(Note that outputs may be connected in series even when this nomenclature is not used)

@BB or @ BHB or @BBH or @BHBH or @CC or @CCM

where @ is the total voltage of any two B, BH, C or CM modules connected in series.

or @/#BDB or @/#BHDB

where @ is the total series voltage of any B or BH module and DB module channel 1. # is the output voltage of the DB module channel 2. Voltages for # are within the range given in the DB module tables.

or @HDB

where @ is the total series voltage of any DB module channel 1 and channel 2.

For all outputs connected in series:
Permissible min. value for @ is given by summing the min. voltage ratings of the outputs connected in series.
Permissible max. value for @ is given by summing the max. voltage ratings of the outputs connected in series.

Custom Models:

Model: NV350 LSS 24/24DB 15.5/5.5DB (K30045A)
Maximum outputs: 24V, 1A; 24V, 0.7A; 15.5V, 6.4A; 5.5V, 6.4A. (total power 175W max.)
Maximum ambient: 50°C
Orientations: Horizontal with chassis lowest, on either side.
Comments: PSU has fan drive voltage fixed at 5.5V.

Model: NV350 LSS 24/24DB (K30045B)
Maximum outputs: 24V, 7A; 24V, 0.7A. (total power 184.8W max.)
Maximum ambient: 50°C
Orientations: Horizontal with chassis lowest, on either side.
Comments: PSU has fan drive voltage fixed at 5.5V.

Model: NV350 TSS 24B 15BH 5/15DB (K30052X, where X can be any character)
Maximum outputs: 350W max.
Comments: PSU has top fan fitted.
Compliant with EN/IEC/UL/CSA 60950-1 only

Model: NV350 KISE5V 12/12DB 5B (X00004#, where # can be any number of characters)
Maximum outputs: 250W max.
Comments: PSU has a 45° angle fan fitted at the output end producing reverse air flow. Output cables of 12 to 24 AWG, which have a maximum length of 500mm, are supplied with this model. The chassis is 75mm longer in length compared to the standard chassis. See model on page 28.
Compliant with EN/IEC/UL/CSA 60950-1 only

Model: NV350 LISIS5V 3.3B 12BH 5/15DB (K30068X, where X can be any character)
Maximum outputs: 201.4W max.
Comments: PSU has fixed, reduced speed fan set to 5.5V.
Compliant with EN/IEC/UL/CSA 60950-1 only

Model: NV350 LIS 15/15DB 12/12DB 5.25/12DB (K30073A)
Maximum outputs: 15V,3A; 15V,2A; 12V,6A; 12V,2A; 5.25V,9A; 12V,2A
Comments: PSU has fixed, reduced speed fan set to 5.5V.
Compliant with EN/IEC 60950-1 only

ELECTRICAL & THERMAL RATINGS:

Input Parameters

Standard	60950-1/61010-1/62368-1	60601-1
Nominal input voltage (V)	100 - 240	100 - 240
Input voltage range (V)	85 - 264	85 - 264
Input frequency range (Hz)	47 - 440	47 - 63
Maximum input current (A)	5.5	5.5
Inrush Current (A)	<15	

For input voltages between 85 and 89.9V the output power is derated to 94% of the values given in the Cooling Options Table.

Output modules:

Module	Output Voltage	Occupied Slots	Maximum Average Current According to Slot Position (A)					
			Slot 1	Slot 2	Slot 3	Slot 4	Slot 5	Slot 6
B	3.14-3.6V	2	40	-	40	40	40	-
	4.75-5.5V		40*	-	40*	40*	40*	-
	7-9V		22.5**	-	22.5**	22.5**	22.5**	-
	12-15.5V		16***	-	16***	16***	16***	-
	24-28V		8****	-	8****	8****	8****	-
BH	12-15.5V	2	20#	-	20#	20#	20#	-
	24-28V		10##	-	10##	10##	10##	-
C	12-13.2V	3	33.34†	-	33.34†	33.34†	-	-
	15-16.5V		26.67†	-	26.67†	26.67†	-	-
	24-26.4V		16.67†	-	16.67†	16.67†	-	-
	27-32V		14.82††	-	14.82††	14.82††	-	-
CM	24-26.4V	3	-	16.67†††	16.67†††	16.67†††	-	-
DA CH1	11.88-12.25V	1	-	-	-	-	3¥	-
DA CH2	-11.9 to -11.6V		-	-	-	-	1¥¥	-
DB CH1	3.14-3.6V	2	25	-	25	25	25	-
	4.75-5.5V		25	-	25	25	25	-
	5.5-6.5V††††		25	-	25	25	25	-
	12-15.5V		13¥¥¥	-	13¥¥¥	13¥¥¥	13¥¥¥	-
	24-28V		7¥¥¥¥	-	7¥¥¥¥	7¥¥¥¥	7¥¥¥¥	-
DB CH2	3.3-6V‡		10	-	10	10	10	-
	7-15.5V		5	-	5	5	5	-
	24-32V		2	-	2	2	2	-

* - Linearly derate from 40 to 36A over the voltage range 5.2 to 5.5 V.
** - Linearly derate from 22.5 to 20A over the voltage range 8 to 9V.
*** - Linearly derate from 16 to 13A over the voltage range 13.5 to 15.5 V.
**** - Linearly derate from 8 to 7A over the voltage range 26 to 28 V.
# - Linearly derate from 20 to 16.5A over the voltage range 13.2 to 15.5 V.
- Linearly derate from 10 to 8.5A over the voltage range 25.7 to 28 V.
† - C & CM modules may output up to 600W for up to 10 seconds providing that the converter ratings are not exceeded and the average power from the module does not exceed the following: 400W for 115 - 264Vac input or 350W for 90Vac input (average power may be linearly interpolated between 90 and 115Vac input).
†† - Derate to 400W above 27V. C & CM modules may output up to 600W for up to 10 seconds providing that the converter ratings are not exceeded and the average power from the module does not exceed the following: 400W for 115 - 264Vac input or 350W for 90Vac input (average power may be linearly interpolated between 90 and 115Vac input).
††† - CM Module cannot be fitted to slot 1 due to medical spacing requirements.
†††† - See Table below

DB modules with 6V nominal, Output Channel1		
Cooling options C, S, T & V	O/P 1 : 5.5 - 6V	O/P 1 + O/P 2 : 195W total.
	O/P 1 : 6 - 6.5V	O/P 1 + O/P 2 : Linearly derate from 195 to 170W total.
Cooling option Q	O/P 1 : 5.5 - 6V	O/P 1 + O/P 2 : 180W total.
	O/P 1 : 6 - 6.5V	O/P 1 + O/P 2 : Linearly derate from 180 to 140W total.
Cooling options P & R	O/P 1 : 5.5 - 6.5V	O/P 1 + O/P 2 : 120W total.

DB modules with 6V nominal channel 1 are not allowed when channel 2 exceeds 5.5V.
¥ - 3A forward air, 2A reverse air.
¥¥ - 1A forward air, 0.6A reverse air.
¥¥¥ - Linearly derate from 13 to 10A over the voltage range 12.5 to 15.5 V.
¥¥¥¥ - Linearly derate from 7 to 6A over the voltage range 25 to 28 V.
‡ - Voltage measured at the module power terminals. This voltage at the power terminals must not be exceeded when remote sense is used.

Cooling Options:

Code	Cooling Option	Input Voltage Range (Vac)	Total PSU output power (W)	Max. ambient (°C)	Derating †
S, V, T	Forward airflow, standard fan (fixed speed & temp. controlled)	90 - 264 ‡	350W continuous (400W peak if 350W average #)	65	2.5% per °C above 50°C
S, V	Forward airflow, standard fan (fixed speed & temp. controlled)	115 - 264	450W continuous (510W peak if 450W average #)	65	2.5% per °C above 50°C
S, V, T	Forward airflow, standard fan (fixed speed & temp. controlled)	180 - 264	664W continuous (740W peak if 600W average #)	65	2.5% per °C above 50°C
R	Reverse airflow, standard fan	90 - 264 ‡	250 W continuous (no peak rating)	65	2.5% per °C above 50°C
Q	Forward airflow, quiet fan	90 - 264 ‡	350 W continuous (no peak rating)	65	2.5% per °C above 50°C
T	Top fan for model K30052x only	90 - 264 ‡	350 W continuous (no peak rating)	65	2.5% per °C above 50°C
P	Reverse airflow, quiet fan	90 - 264 ‡	250 W continuous (no peak rating)	60	3.8% per °C above 50°C
C, U	Customer air, fan not fitted	Refer to Customer Air Cooling section in for details.			

- † Both the total output power and the module output currents are derated by the given value.
- ‡ For input voltages between 85 and 89.9V the output power is derated to 94% of the values given for 90V input.
- # The PSU may output the given peak power for up to 10 seconds providing that the average power from the PSU does not exceed the stated value.
- Continuous, peak and average power ratings may be linearly interpolated for input voltages between 90 and 180V.

- Global Option standby outputs (12-13.5V at 1A or 5-5.5V at 2A) should not be included when calculating total PSU output power, but they are subject to the current deratings for operation above 50°C.
- Global Options with output voltages between 5.01 and 5.5V have their max. output current linearly derated from 2A at 50°C ambient to 1.4A at 65°C ambient.
- For reverse airflow cooling all B, BH and DB modules are limited to a maximum output power of 150W (total for both channels on dual output modules).

Customer Air Cooling (options C or U):

Customer Air Cooling:

The following method must be used for determining the safe operation of PSUs when C or U option (Customer Air) is fitted, ie fan not fitted to PSU. The minimum permitted airflow for customer air cooling is 0.5m/s.

For PSUs cooled by customer supplied airflow the components listed in the following table must not exceed the temperatures given. Additionally ratings specified for units with an internal fan must still be complied with, eg mains input voltage range, maximum output power, module voltage / current ratings and maximum ambient temperature. To determine the component temperatures the heating tests must be conducted in accordance with the requirements of the appropriate standards.

Test requirements include: PSU to be fitted in its end-use equipment and operated under the most adverse conditions permitted in the end-use equipment instruction manual/specification and which will result in the highest temperatures in the PSU. To determine the most adverse conditions consideration should be given to the end use equipment maximum operating ambient, the PSU/assembly loading and input voltage, ventilation, end use equipment orientation, the position of doors & covers, etc. Temperatures should be monitored using type K fine wire thermocouples (secured with cyanoacrylate adhesive, or similar) placed on the hottest part of the component (out of any direct airflow) and the equipment should be run until all temperatures have stabilised.

Circuit Ref.	Description	Max. Temperature (°C)
L2, L3, L4	Filter/PFC assy: Choke winding	155
C3, C4	Filter/PFC assy: X capacitors	100
L1	Filter/PFC assy: Boost choke winding	130
C1	Filter/PFC assy: Electrolytic capacitor	60 (105)
T1	Filter/PFC assy: Flyback transformer winding	130
RLY1	Filter/PFC assy: Relay	100
TX1, TX2	Modules: Power transformer windings	130
L1, XL1	B, BH & DB module chokes	130
L1	C & CM module chokes	140
Global option T2	Global Options: Transformer winding	90 (130)
Various	All other choke & transformer windings	110
Various	All <=10mm diameter electrolytic capacitors	80 (105)
Various	All 12.5mm diameter electrolytic capacitors	85 (105)
TX1	DA Module: Flyback transformer windings	100 (130)
XTH101	Primary IMS measured adjacent to XTH101	100 (105)

See component layout drawings below for locations of components. Higher temperature limit (in brackets) may be used but product life may be reduced.

Input Connections:

Input screw teminals – M3 screws with 8.25mm spacing between screw head centres.
Input IEC 60320 – rated 10A/250Vac (15A/132Vac)

Maximum torque settings for input screw terminals: M3: 0.5 – 0.6Nm

Output Connections:

Maximum Torque Settings for Output Screw Terminals: M3 – 0.5 – 0.6Nm
M4 – 1.1 – 1.3Nm

Modules connected in series or parallel

For non-standard models. module outputs can be connected in series. See section on Module Limitations.

Module outputs cannot be paralleled to other modules in the same power supply or paralleled to other modules in another unit.
Paralleling of modules for redundant operation i.e. Output load does not exceed the load current of single module. This can be achieved by isolating the outputs using orring diodes.
With this method remote sensing around these diodes is not allowed.

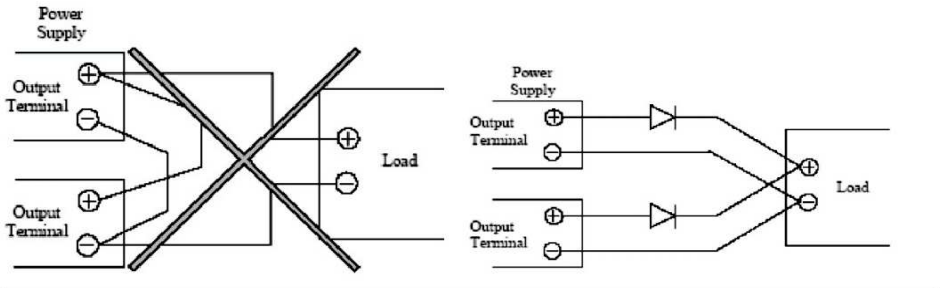

Module limitations

Series modules:

Non-standard models may have specific outputs connected in series. Connecting outputs in series may alter the SELV classification. Refer to the comments below.

- All outputs are SELV except under the following circumstance: Outputs connected in series are non-SELV if the total output voltage + 30% of the max. Rated output voltage of the output with the highest rated voltage exceeds 60Vdc (the 30% addition allows for a single fault in any one individual channel).
- If the total voltage of outputs connected in series exceeds the 60Vdc SELV limit then all outputs must be considered non-SELV.
- The total voltage of outputs connected in series must not exceed 160V.
- Non-SELV outputs are hazardous and must not be made user accessible. They must be guarded or a deflector fitted during installation to avoid a service engineer making inadvertent contact with the output terminals, or dropping a tool onto them.
- All outputs have operational spacings to earth and due consideration must be given to this in the end product design.
- Adjusting output voltage beyond the stated range may cause over voltage protection (OVP) to operate, whereby the output will turn off. To reset OVP, turn back the output voltage adjustment and remove the mains supply for 30 seconds and then switch back on.

62368 series modules

Non-standard models may have specific outputs connected in series. Connecting outputs in series may alter the Energy Source Classification. Refer to the Module Output Energy Source Classification Table below.

- If the total voltage of outputs connected in series exceeds the 60Vdc, 42.4Vpk ES1 limit then all outputs must be considered as ES2 or ES3 as appropriate.
- The total voltage of outputs connected in series must not exceed 160V.
- Outputs that are not ES1 are hazardous and must not be made user accessible. They must be guarded or a deflector fitted during installation to avoid a service engineer making inadvertent contact with the output terminals, or dropping a tool onto them.
- All outputs have operational spacings to earth, and due consideration must be given to this in the end product design.
- Adjusting output voltage beyond the stated range may cause over voltage protection (OVP) to operate, whereby the output will turn off. To reset OVP, turn back the output voltage adjustment and remove the mains supply for 30 seconds and then switch back on.

Module Output Energy Source Classification Table

Module Code	Module Description	Voltage range (V)	Number of modules	Number of channels	ES1	ES2	ES3
B	Single module	3.14 to 3.6, 4.75 to 5.5, 7 to 9, 12 to 15.5, 24 to 28	1	1	3.14 to 3.6, 4.75 to 5.5, 7 to 9, 12 to 15.5, 24 to 28	-	-
BH	Single module	12 to 15.5, 24 to 28	1	1	12 to 15.5, 24 to 28	-	-
C	Single module	12 to 13.2, 15 to 16.5, 24 to 26.4, 27 to 32	1	1	12 to 13.2, 15 to 16.5, 24 to 26.4, 27 to 32	-	-
CM	Single module	13 to 13.2, 15 to 16.5, 24 to 26.4, 27 to 32	1	1	13 to 13.2, 15 to 16.5, 24 to 26.4, 27 to 32	-	-
DB (CH1)	Dual module	3.14 to 3.6, 4.75 to 5.5, 5.5 to 6.5, 12 to 15.5, 24 to 28	1	1	3.14 to 3.6, 4.75 to 5.5, 5.5 to 6.5, 12 to 15.5, 24 to 28	-	-
DB (CH2)	Dual module	3.3 to 6, 7 to 15.5, 24 to 32	1	1	3.3 to 6, 7 to 15.5,	24 to 32	-
DA (CH1)	Dual module	11.88 to 12.25	1	1	11.88 to 12.25	-	-
DA (CH2)	Dual module	-11.6 to -11.9	1	1	-11.6 to -11.9	-	-
BB	Two single output modules in series	6.28 to 7.2, 9.5 to 11, 14 to 18, 24 to 31, 48 to 56	2	1	6.28 to 7.2, 9.5 to 11, 14 to 18, 24 to 31	48 to 56	-
BBH or BHB	Two single output modules in series	24 to 31, 48 to 56	2	1	24 to 31	48 to 56	-
BHBH	Two single output	25 to 31, 48 to 56	2	1	24 to 31	48 to 56	-

	modules in series						
CC	Two single output modules in series	24 to 26.4, 30 to 33, 48 to 52.8, 54 to 64	2	1	24 to 26.4, 30 to 33	48 to 52.8V, 54 to 64	-
BDB	Single module in series with CH1 of a dual module	6.28 to 7.2, 9.5 to 11, 24 to 31, 48 to 56	2	2	6.28 to 7.2, 9.5 to 11, 24 to 31	48 to 56	-
BHDB	Single module in series with CH1 of a dual module	24 to 31, 48 to 56	2	2	24 to 31	48 to 56	-

Module and primary options

Given below are some suitable connection systems – mating parts and crimp tools:
For the screw terminals
Ring Tags: Up to 50A. AMP PIDG terminals
Red: M3 36151, M4 320551, M5 130660
Blue: M3 320561, M4 320560, M5 130663
Yellow: M4 320568, M5 130167
Crimp tool: 169400 Die set 169404
R ing Tags: 50A and over AMP AMPOWER III
M5 (8 AWG) 719538-2 (6 AWG) 719551-1
Terminals with crimp tool: 708777-4

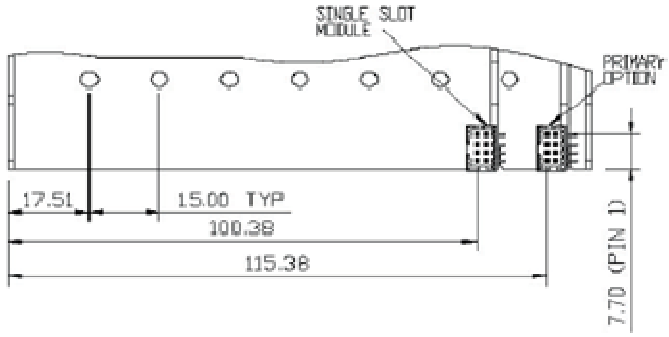

Primary option & single slot module

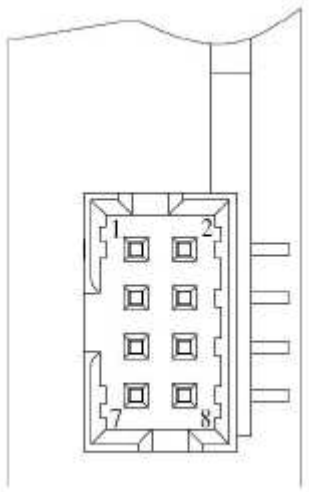

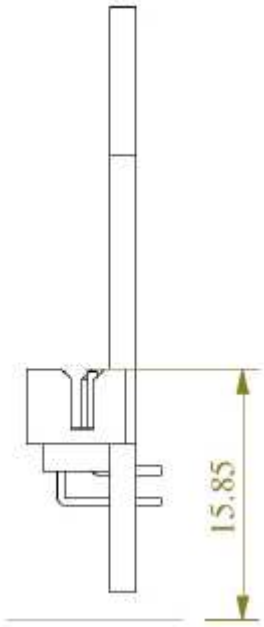

Primary Option Connector:
1 V Standby
2 V Standby Return
3 INH Logic 1
4 INH Logic 0
5 Power Good Collector
6 Power Good Emitter
7 AC Fail Collector
8 AC Fail Emitter

Single Slot Module Connector
1 + 12V
2 + 12V
3 + 12V
4 0V
5 0V
6 0V
7 -12V
9 -12V

Mating Connector
Housing: Molex 51110-0860
Crimp pin: 50394
Hand crimp tool: 69008-0959

Dual slot, single and twin output modules

Option Connector
1 CH2 0V (Twin) CH1 Gate Drive Supply (Single)
2 CH2 Module Good (Twin) Share Control (Single)
3 CH2 On/Off (Twin) N/C (Single)
4 Module Inhibit
5 CH1 0V
6 CH1 Module Good
7 CH1 Remote Sense-
8 CH1 Remote Sense+

Secondary Option Connection
Housing: Molex 51110-0860
Crimp pin: 50394
Hand crimp tool: 69008-0959

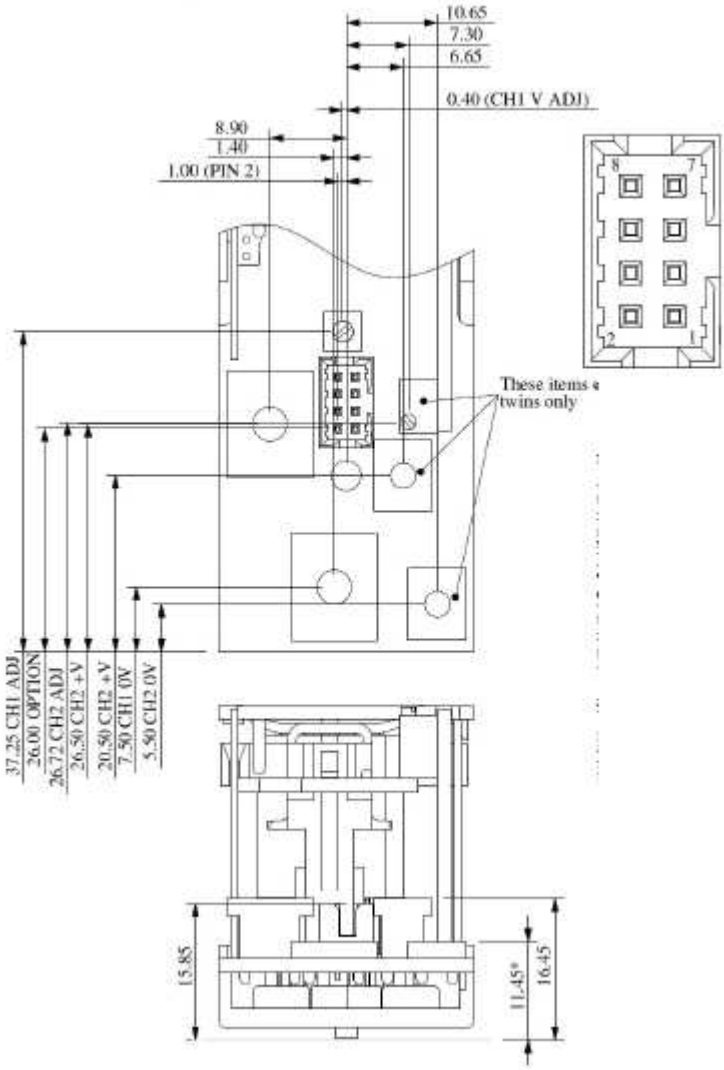

NV350PFC Component Layout Drawings

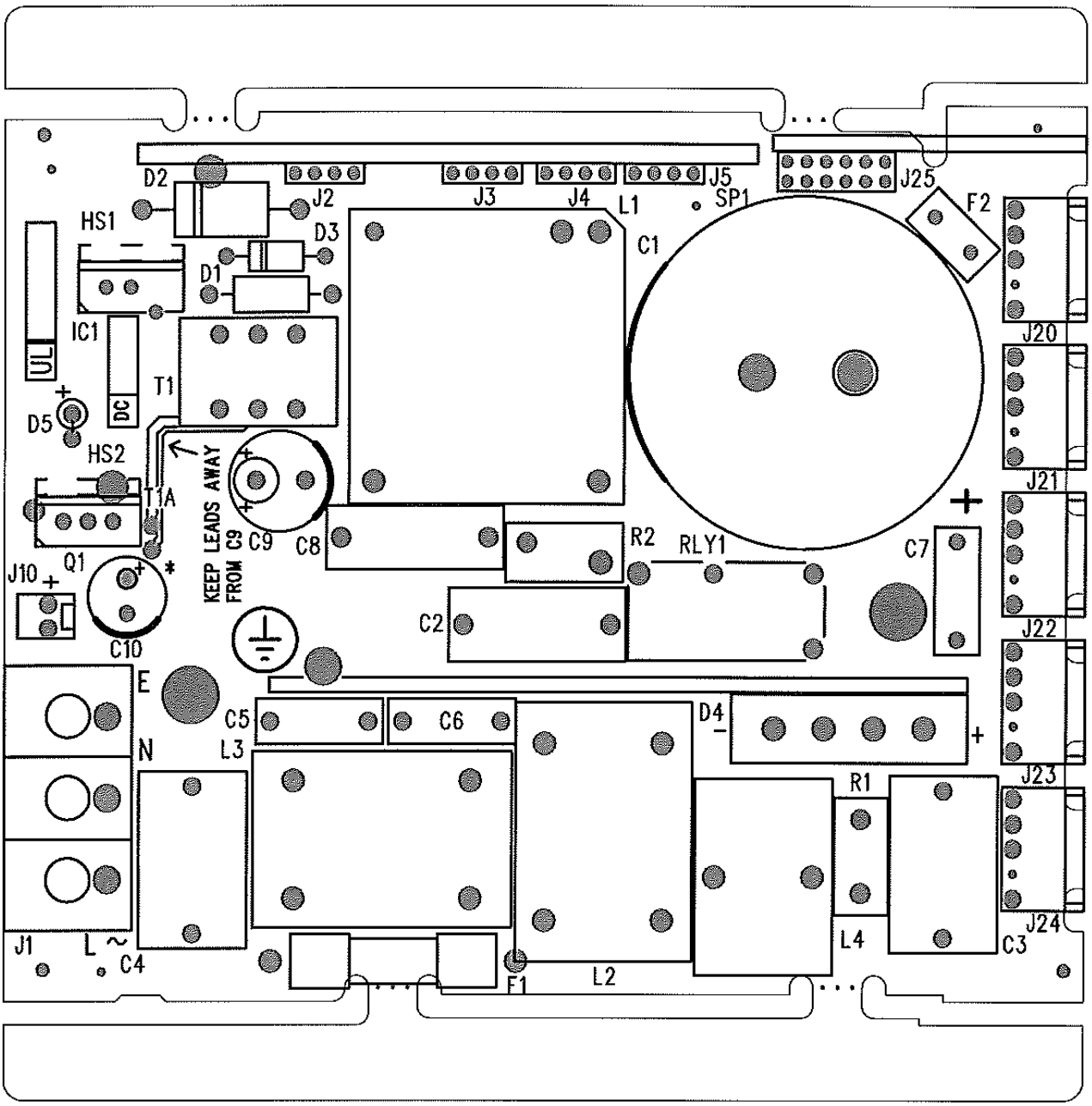

Layout of IMS

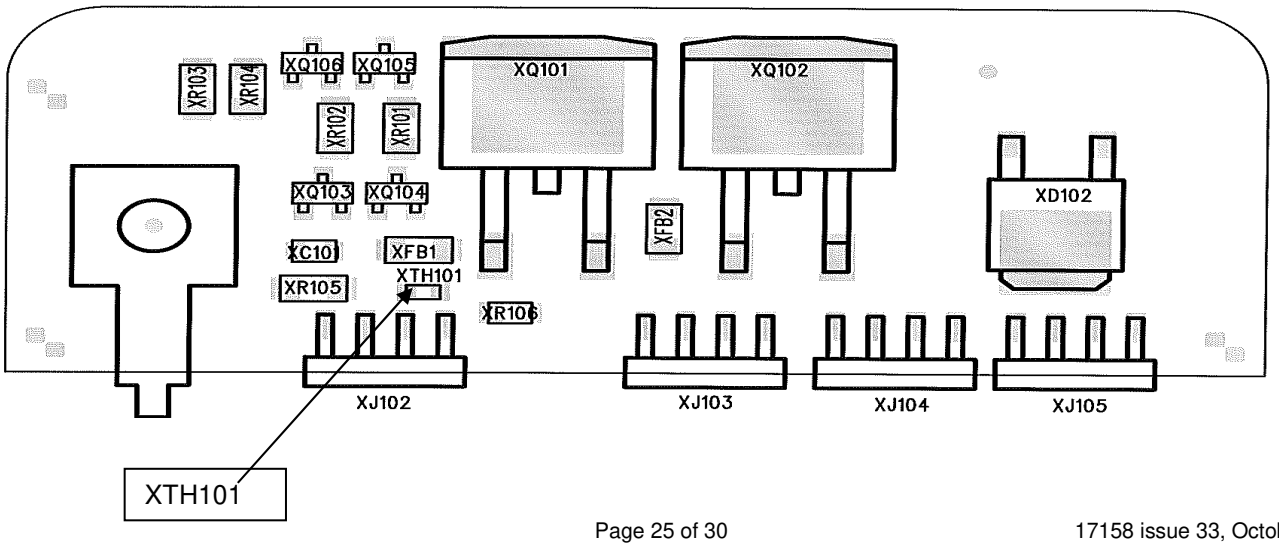

Layout of Primary Option

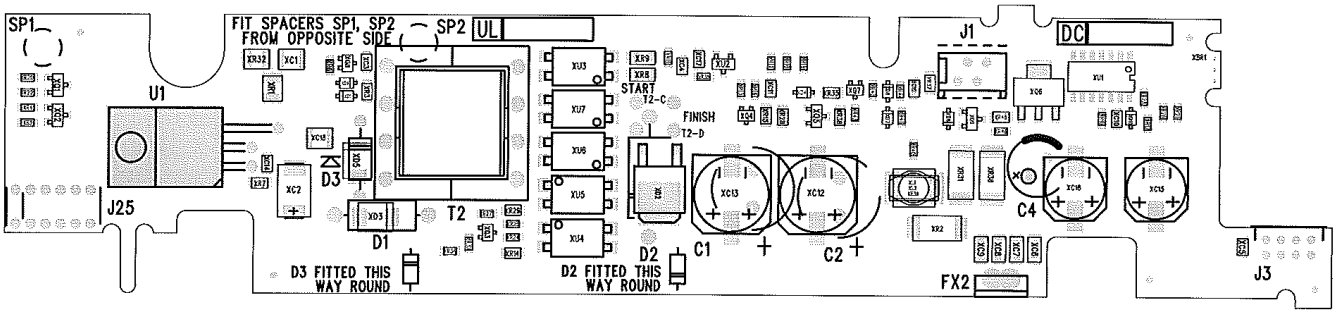

Layout of B and BH Modules

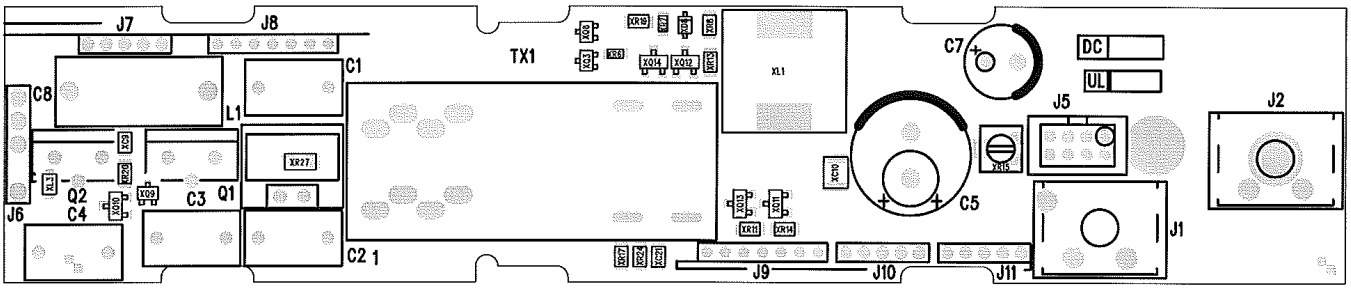

Layout of C Modules

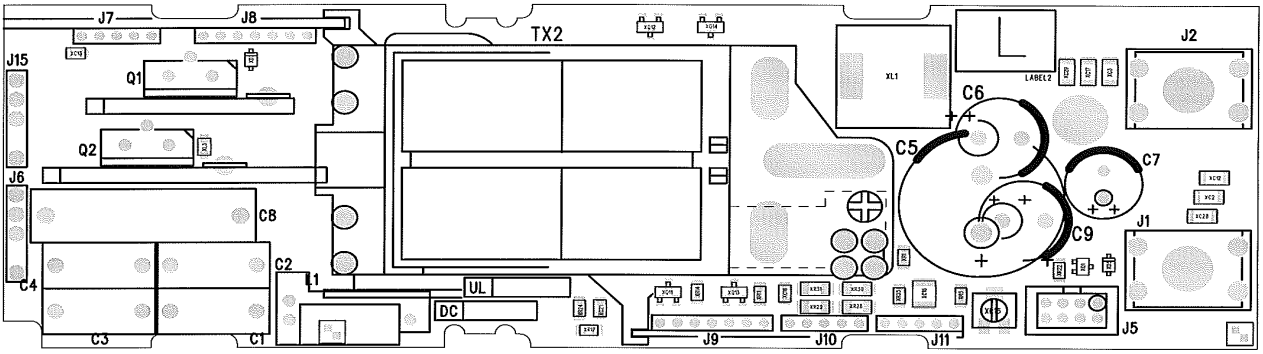

Layout of CM Modules

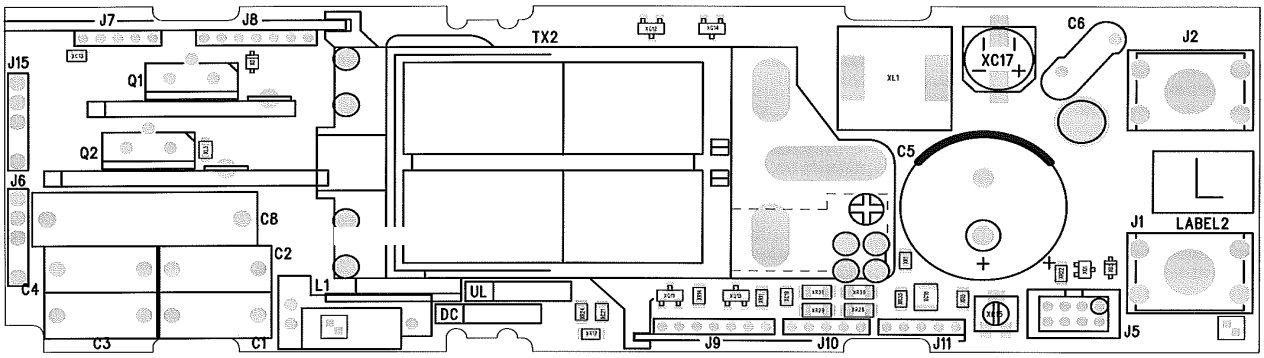

Layout of DA Module

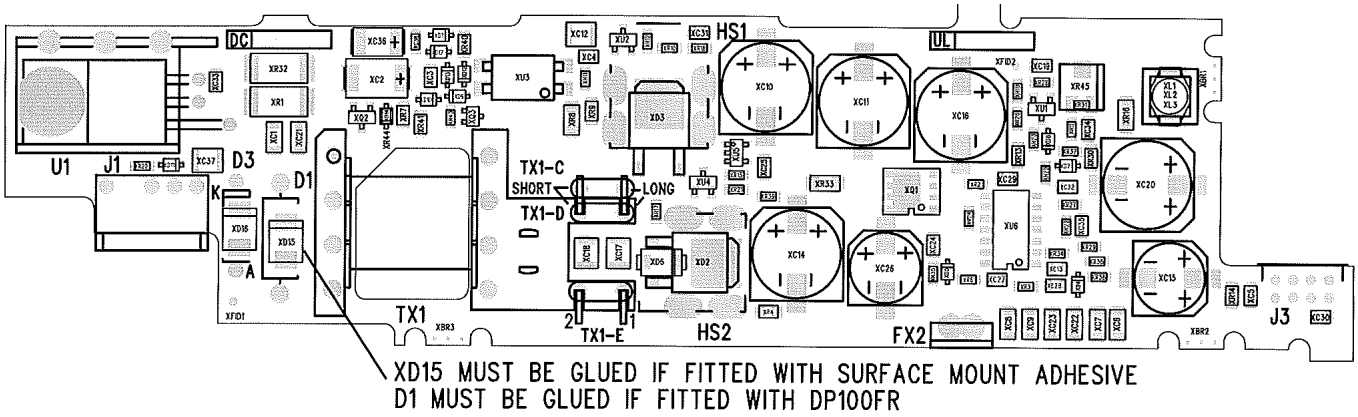

Layout of DB Modules

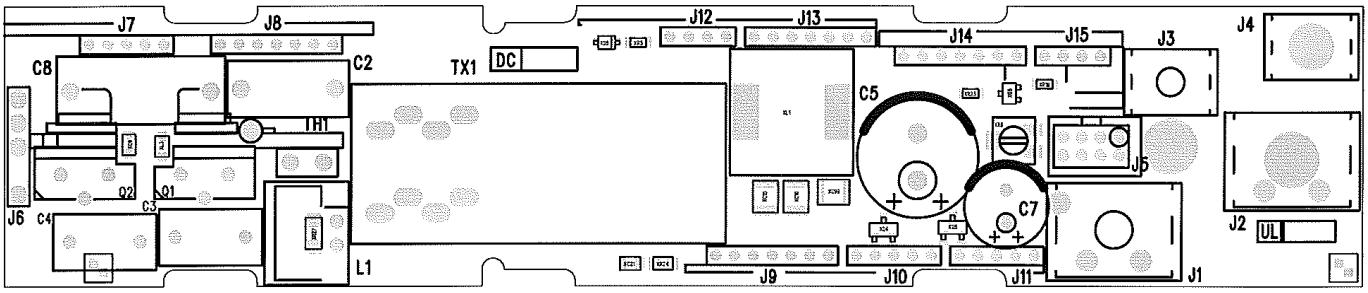

Slot Positions NV350

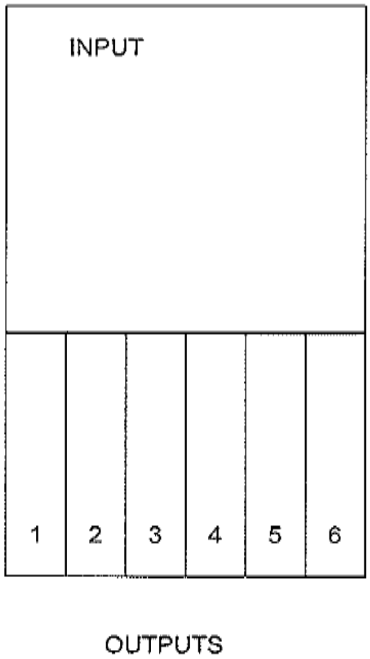

NV350 Outline Drawing

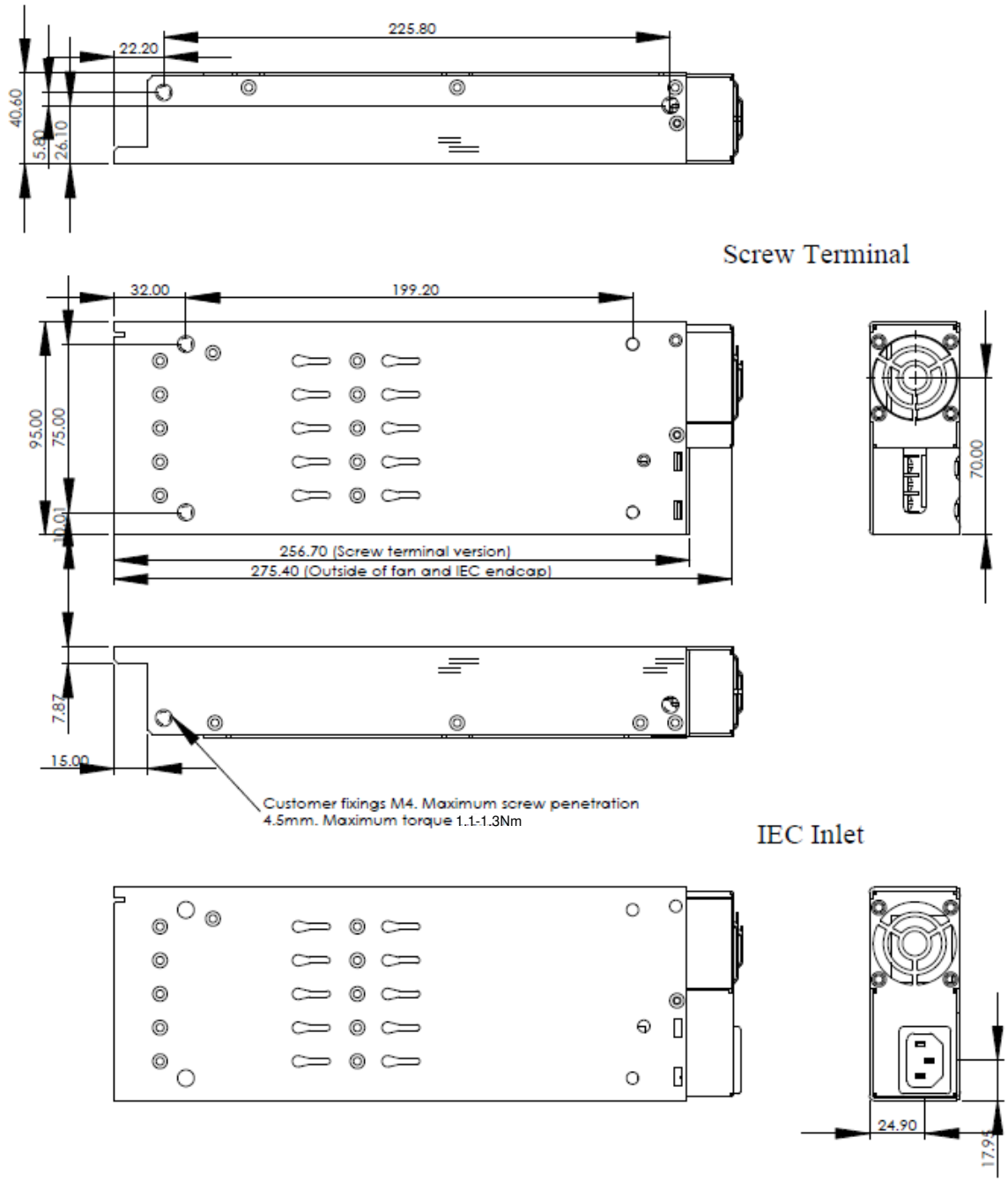

Notes
Tolerances: Edge to edge/Edge to centre, +/_0.5
Centre to centre +/_0.2

NV350 Top Fan Outline Drawing

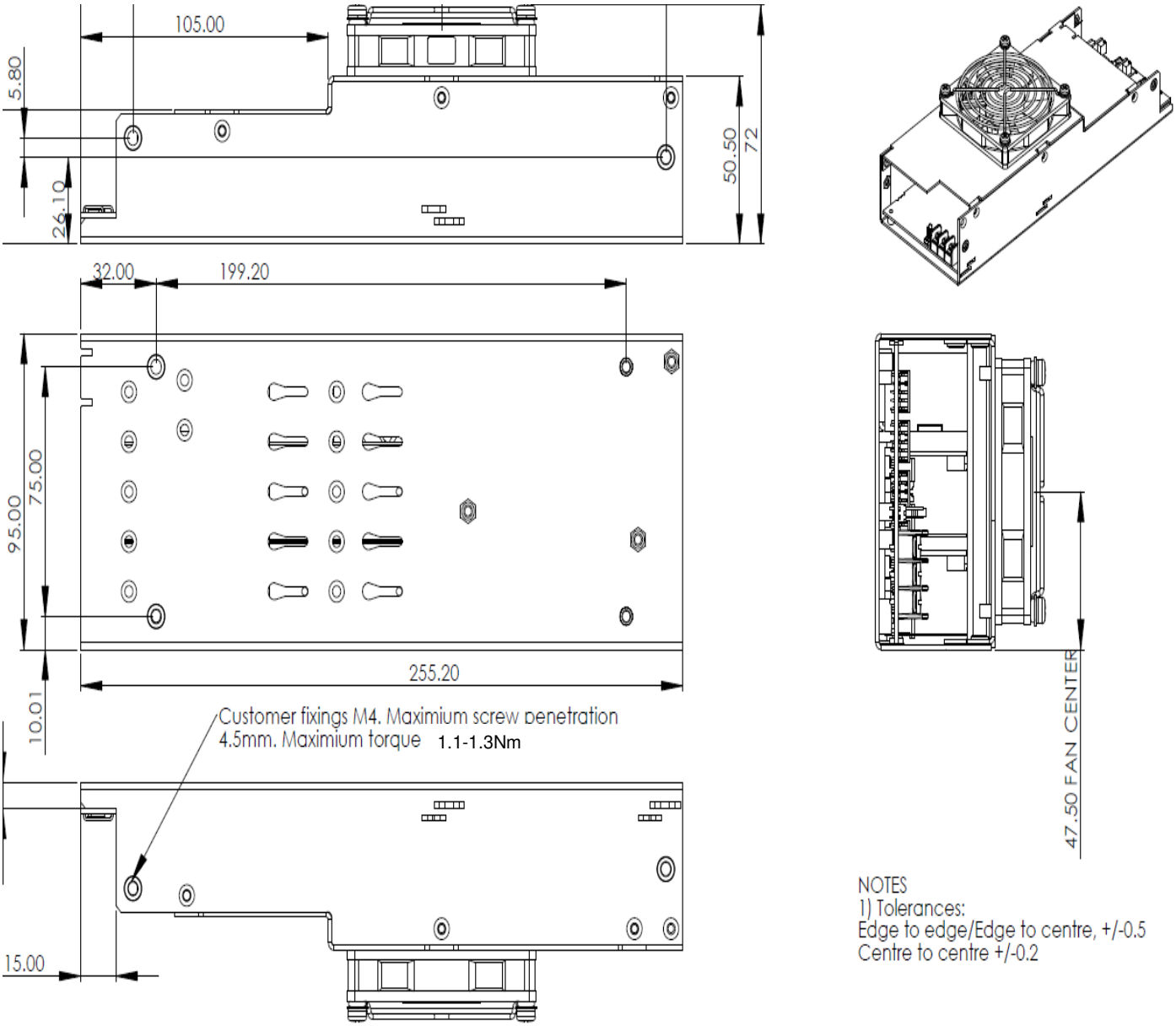

NV350 (X00004#) Top, at an Angle & Fan Outline Drawing

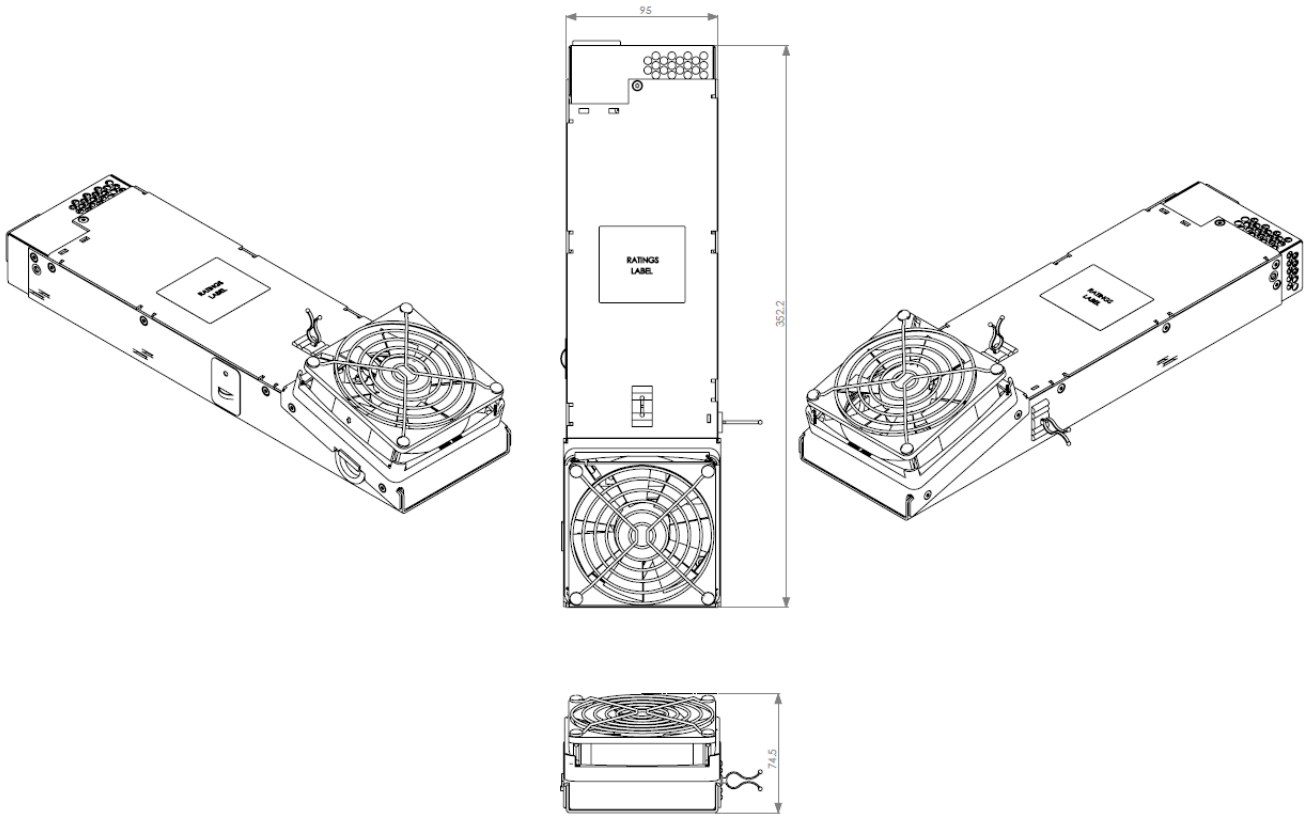

Output Loom Information

Cable	mm²	AWG	Connector	Pins	Output Voltage
Red	1.5	16	X2 (JST XLP-12V)	7, 8, 9, 10, 11 & 12	+5v
Black	1.5	16	X2 (JST XLP-12V)	1, 2, 3, 4, 5 & 6	0v
Yellow	1.5	16	X10 (TE 1-480424-0)	1	+12v
Black	1.5	16	X10 (TE 1-480424-0)	2 & 3	0v
Yellow	1.0	18	X3 (JST VHR-6N)	2	+12v
Black	1.0	18	X3 (JST VHR-6N)	1	0v
Blue	2.5	14	M4 Ring Tag	N/A	-12v
Black	4.0	12	M4 Ring Tag	N/A	0v
Red	4.0	12	M4 Ring Tag	N/A	+5v
Yellow	2.5	14	M4 Ring Tag	N/A	+12v
Green	0.25	24	6mm Spade	N/A	Enable
Black	0.25	24	6mm Spade	N/A	0v

Note: UL ratings/styles are shown in the X00004# B.o.M

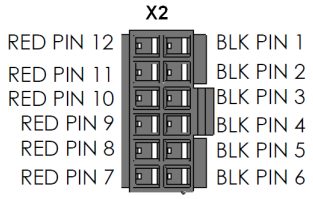

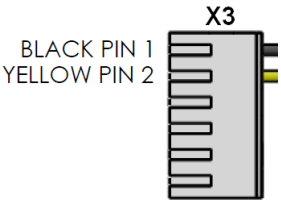

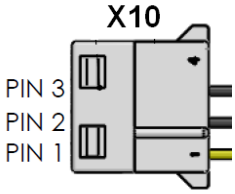

TDK·Lambda
TDK-Lambda UK Ltd
Kingsley Avenue, Ilfracombe
Devon, EX34 8ES
Telephone - Sales and Service +44 (0)1271 856666
Head Office and Works +44 (0)1271 856600
Facsimile +44 (0)1271 864894
WEBSITE: www.uk.tdk-lambda.com